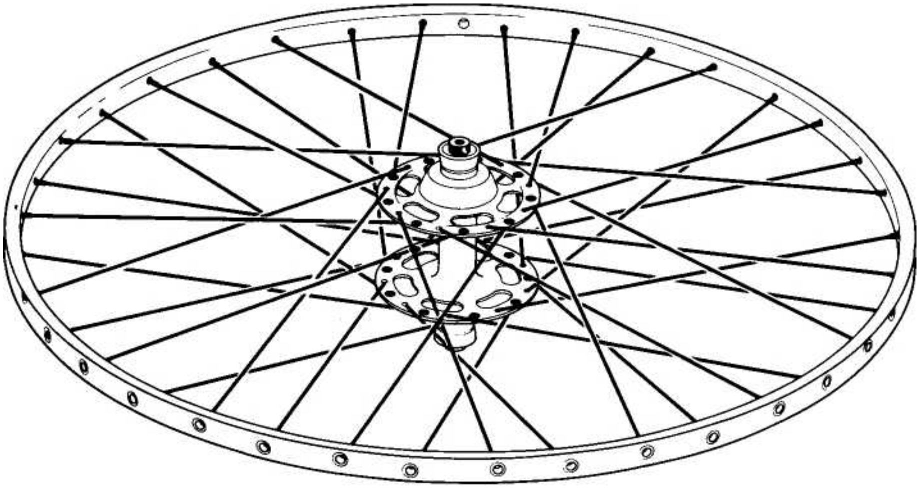

Bicycle Wheel

the Bicycle Wheel

Third Edition

Jobst Brandt

Illustrated by Sherry Sheffield

AVOCET, INC. PALO ALTO
CALIFORNIA

TABLE OF CONTENTS

Bicycle Wheel

INTRODUCTION

When I tried to build my first wheels, I found no books on wheels, and magazine articles offered little help. There was no information about why I should use a particular hub, rim, spoke, or spoke pattern other than that one was "more responsive" than another. The little information I could find was vague and often contradictory.

Where I expected to find the technical principles of wheel building, I found lore and mystique but no written record of the wire-spoked wheel. I believe there was no record because, as a craft, wheel building had generally been learned through informal apprenticeship. It seemed that as long as wheels worked, they were considered unworthy of further investigation. Some builders who developed methods that produced better wheels made their techniques known, others apparently either kept them secret or failed to recognize their significance.

Guided by engineering principles, and with time and experience, I learned to build true and durable wheels. By observing failures, I discovered the effects of different building techniques and various components. Today I realize that the poor quality of the spokes available at that time helped my discoveries. These spokes quickly revealed the merits of different building techniques by a change in their rate of failure.

Bicycles endure unusually high stresses at unusually low speeds, and for this reason seem to violate many design rules that apply to other machines. Because the bicycle is unusual, conventional wisdom has at times led to misconceptions about its wheels. I wrote this book to preserve the information that I gathered and to help others avoid errors that often have led to failures. I hope it fills the void that I perceived.

THE WHEEL: ANCIENT AND MODERN

Although the origin of the wheel may be obscure, its invention as a load carrying device marked the advent of machinery. Today the wheel is an essential part of most machines in the form of gears, pulleys, cams, sprockets, bearings, and other rotating devices. However, it is still most conspicuous as a load carrier; and, from a technical perspective, the bicycle wheel stands out as one of the most elegant of these.

The wire-spoked bicycle wheel was introduced more than a century ago to replace wooden wheels with thick, rigid spokes. Tensioning the wires made these wheels possible, and with them came the lightweight bicycle that we know today. Wire spokes not only reduced weight but also improved durability. Today's wire wheels can carry more than a hundred times their own weight. In off-road bicycling, skilled riders often jump from high obstacles, subjecting their wheels to forces of more than a quarter ton. The wheel's strength is even more impressively demonstrated in the heat of competition where these forces are encountered repeatedly at high speed. Although the bicycle is the world's most common vehicle, few people understand how its wheels achieve their unusual strength.

THE DISK WHEEL

Since earlier editions of this book, disk and other streamlined wheels have been allowed in bicycle racing. This may have been an unfortunate decision because their use has not improved enjoyment of the sport for either participant or spectator, and their construction is out of the hands of bicycle shops and users. Disk wheels are expensive, heavy, and wind sensitive. Although they have contributed toward slight increases in record speeds, they have substantially increased the cost of competing. Because the rule against "unfair advantage" specifically prohibits using any device that is not available to all racers in an event, these wheels give no competitive advantage. Unlike other technical advances, they have not made bicycles safer or simpler to operate.

The book is divided into three parts. Part I (theory) explains how wheels respond to loads. It investigates the merits of various designs and components, and the causes of their failures. Part II (practice) gives a step-by-step guide for building front and rear wheels as well as wheels with various patterns and numbers of spokes. Part III (data and equations) contains test results and equations for computing spoke lengths and other wheel dimensions.

PART I

THEORY OF THE SPOKED WHEEL

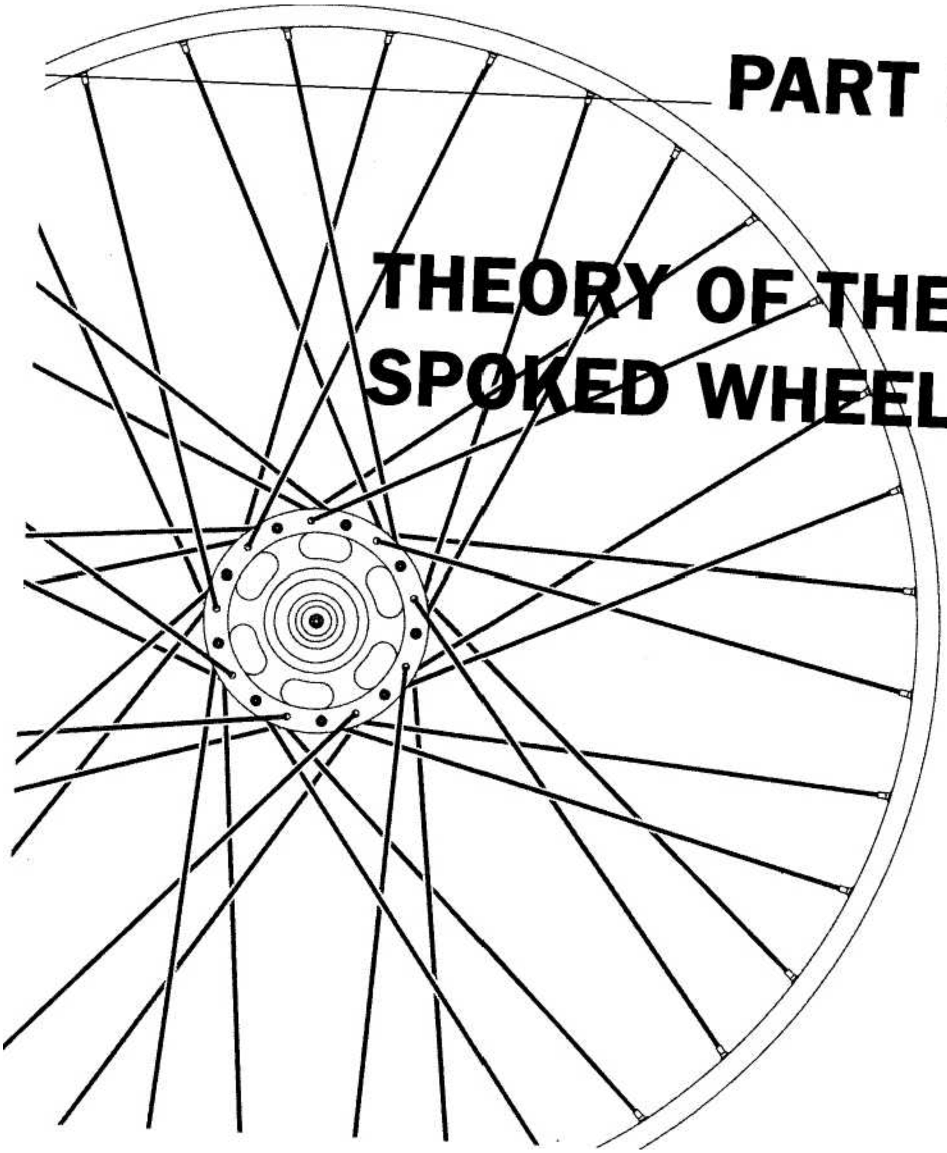

HOW THE WHEEL SUPPORTS A LOAD

Bicycle wheels don't work the way most people think they do. Wire wheels are prestressed structures, with built-in stresses that are reduced when they are subjected to loads. An understanding of prestressed structures will make the forces at work in a wheel more apparent. In selecting bicycle wheels, knowing how forces affect the components is essential. Without this knowledge selecting components is guesswork, and failures will remain a mystery.

Many people believe it is self-evident that the hub hangs from the upper spokes, and that these spokes become tighter when you get on the bicycle. This type of misconception is similar to the belief, once widely held, that the sun rotates around the earth. What may appear self-evident is not always true. The bicycle wheel does not work the way it appears to, but rather in a way that seems to defy common sense. A review of some physical concepts will help to explain this paradox.

In this analysis only the structural parts of the wheel - hub, rim, spokes, and spoke nipples - and the forces that affect them will be considered. Axles, bearings, and tires play no direct role here. They are not part of the wheel structure that is composed of spokes stretched between a hub and rim by threaded nipples. For simplicity, consider the wheel as stationary with an immovable hub, and allow the road to push up against the rim.

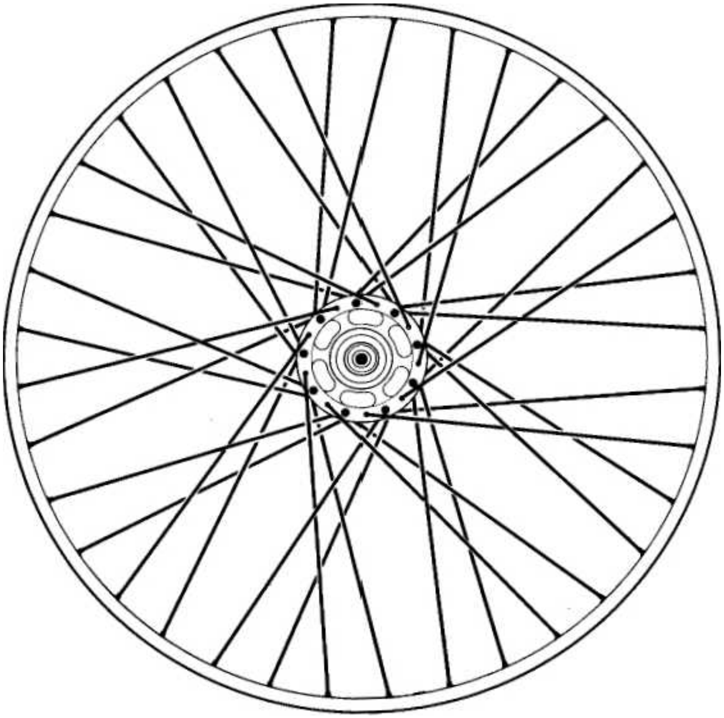

TENSION AND COMPRESSION

In the bicycle wheel, wires replace the rigid spokes of wooden wheels. Although wires are strong, they cannot directly replace wooden spokes that carry loads in compression. In order to work, wires must be tensioned to prevent their buckling under load. With tension, wires can support compression loads up to the point where they become slack. The same loads that increase compression in wooden spokes, reduce tension in wires. As in algebra, where negative and positive numbers are combined to give algebraic sums, in spokes tension and compression are the negative and positive forces whose sums depend on built-in spoke tension and the carried load.

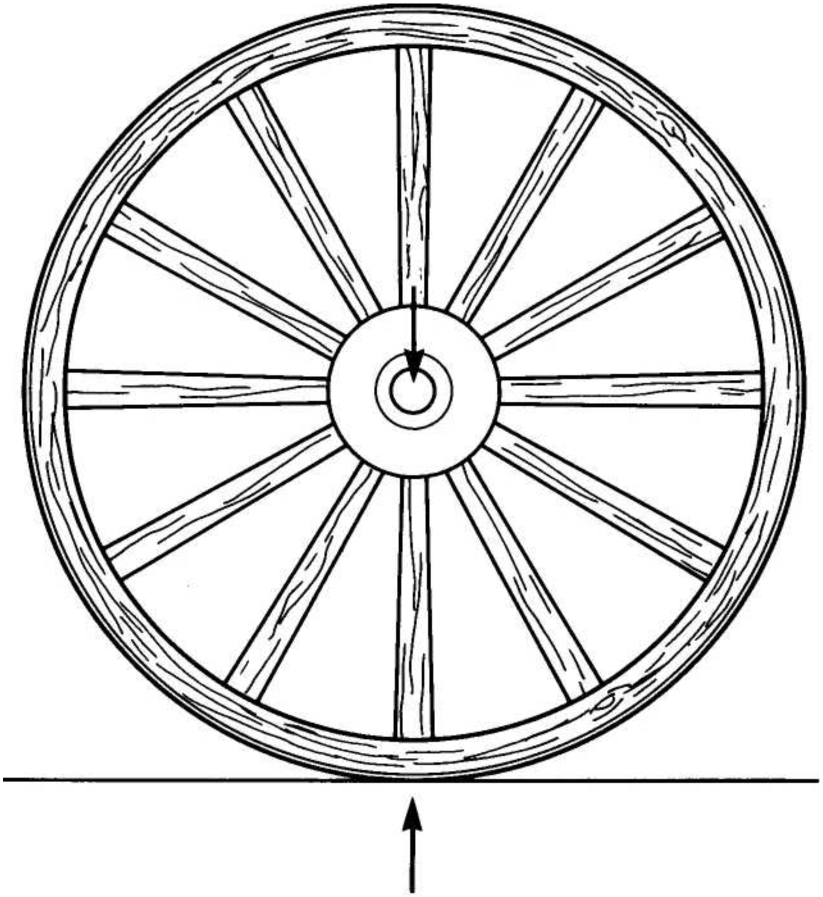

Figure 1. Loaded wagon wheel

A wheel with wire spokes works the same as one with wooden spokes except that the built-in force in its spokes is different. In a wooden-spoked wheel, force is transmitted from the ground to the hub by compressing the bottom spoke. This spoke becomes shorter as it furnishes the upward force to the hub. As in a wooden-spoked wheel, the bottom spokes of a wire wheel become shorter under load, but instead of gaining in compression, they lose tension. With the same load, the net change in force is the same for both wheels. The algebraic sum of negative and positive forces (compression and tension) is the same.

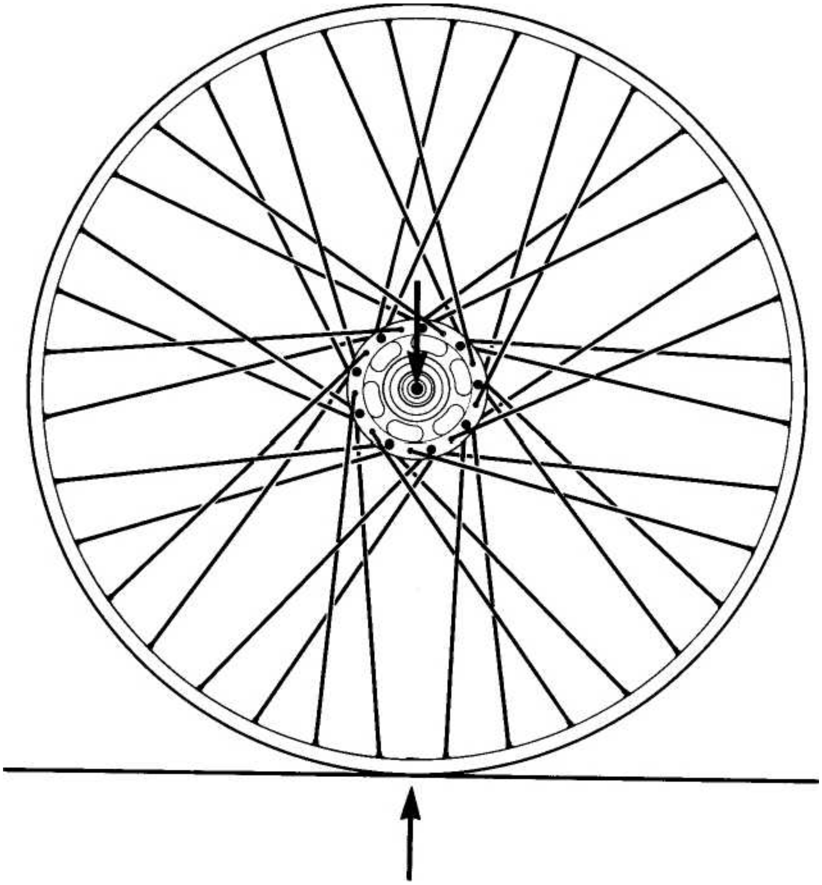

Figure 2. Loaded bicycle wheel

That the bottom spokes support the wheel need not be taken on faith. An experiment will show that only a few spokes at the bottom of the wheel are affected by a vertical load. The relative tension of a spoke can be found by plucking it like a guitar string. The pitch of a spoke, just as the pitch of a guitar string, increases with more tension and decreases with less tension.

When comparing tones, pluck spokes near their nipples with your fingernail. This excites the higher vibration modes and avoids confusion with the mixed lower modes that would occur in crossed spokes that touch (not a problem with radial spokes). With an assistant, who alternately gets on and off the bicycle, you can monitor the pitch of the same spoke moved to various wheel positions and determine how this spoke is affected. Using the same spoke for each test ensures that variations in tension among spokes do not affect the results. Side loads also change spoke tension, so make sure that the "rider" sits centered on the bicycle so that it is balanced.

THE WHEEL STANDS ON ITS SPOKES

Of course the wheel is not supported by the bottom spokes only. Without the rest of the spokes, the bottom ones would have no tension. Standing, in this case, means that the spokes at the bottom are the ones that change stress; they are being shortened and respond structurally as rigid columns. They are rigid as long as they remain tensioned.

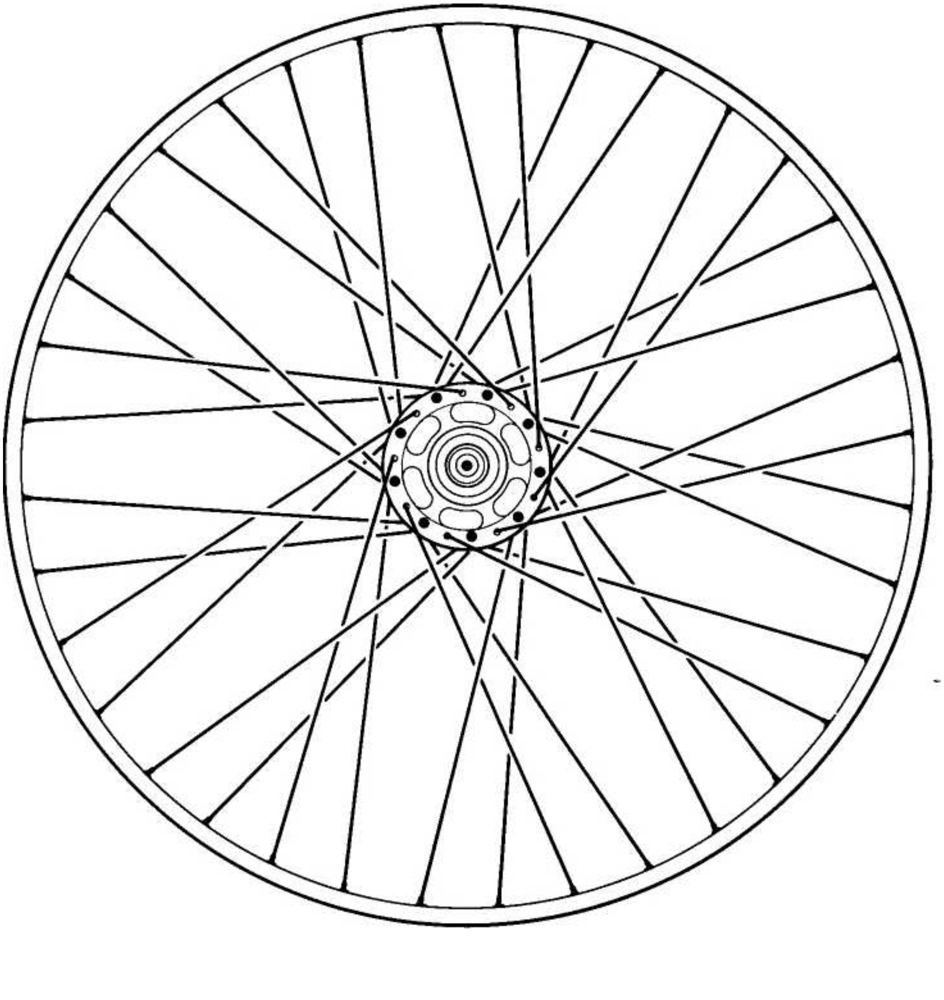

Figure 3. Bicycle wheel

Wire used as a compression member is similar to prestressed concrete used as a tension member. With prestressing, concrete can be used in what appears to be tension. Concrete cannot work in tension just as wires cannot work in compression. However, concrete beams are used as tension members in many bridges. Under load a concrete bridge beam sags at midspan. Sagging compresses the top surface and stretches the bottom. Although the underside elongates, it is not in tension. If it were, cracks would soon open. Such beams are prestressed in compression by internal steel rods to ensure that no part of the beam will experience tension.

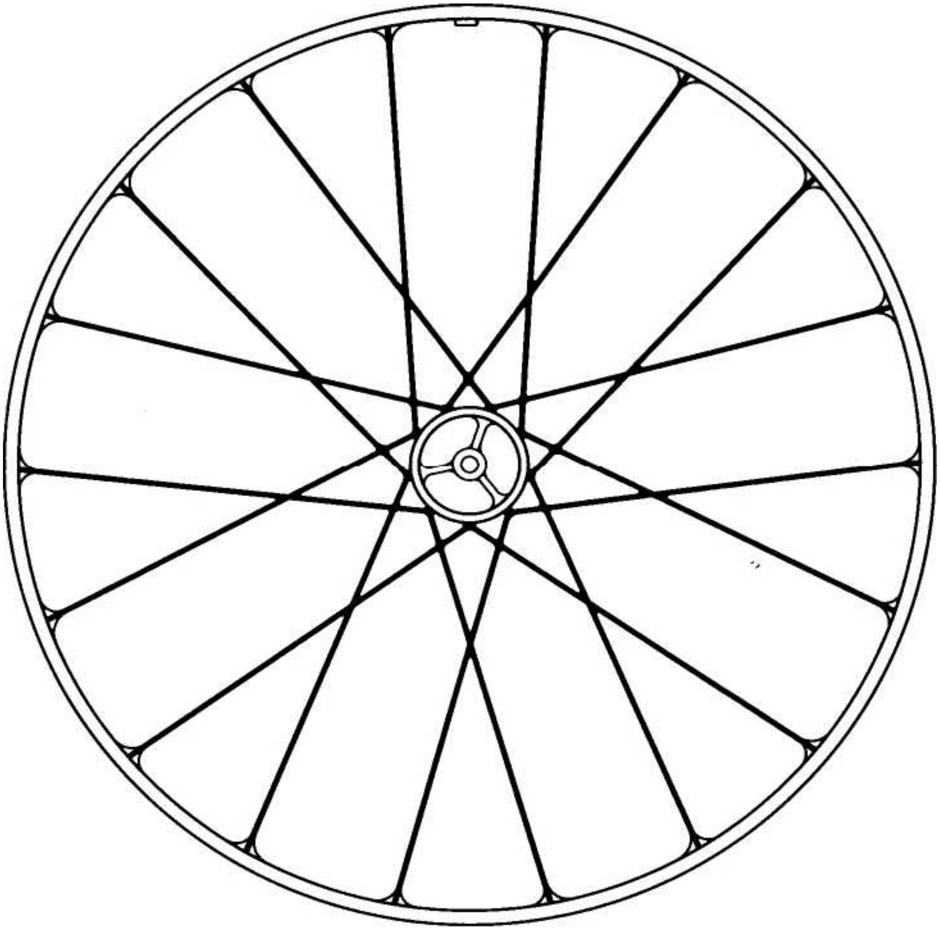

Figure 4. Cast bicycle wheel

Similarly, because it is prestressed, the wheel can stand on its bottom spokes. Stress changes occur only in the bottom spokes, not in the top ones. Structurally, bottom spokes are acting as compression members in the wheel, and no measurement of their elastic movement reveals that they are anything but rigid columns. Because individual spoke tension results from tension in all spokes, the wheel can be analyzed only by considering all its spokes. The concept that the hub hangs from the upper spokes contradicts all measured and computed behavior of bicycle wheels.

If you find the concept that the wheel stands on its spokes difficult to visualize, you can get another perspective from the following example. Imagine that a wheel is held horizontally (the axle mounted vertically) in a rigid fixture, and that you press its rim inward with your hand. It should be apparent that the rim will deflect inward at the place where you apply the force rather than elsewhere. Nothing changes at the far side of the wheel. Your hand, in this example, represents the force of the road pressing up against the wheel.

For electrical engineers the concept of prestressing should be familiar since it is common in electrical circuits. Circuits with components (spokes) that cannot withstand reverse currents (compression) are often designed to accept oscillating signals with positive and negative currents. To make this possible, such circuits are biased (tensioned) so that no reverse currents occur. This pretensioned network is analogous to a tensioned wire wheel.

LOADS

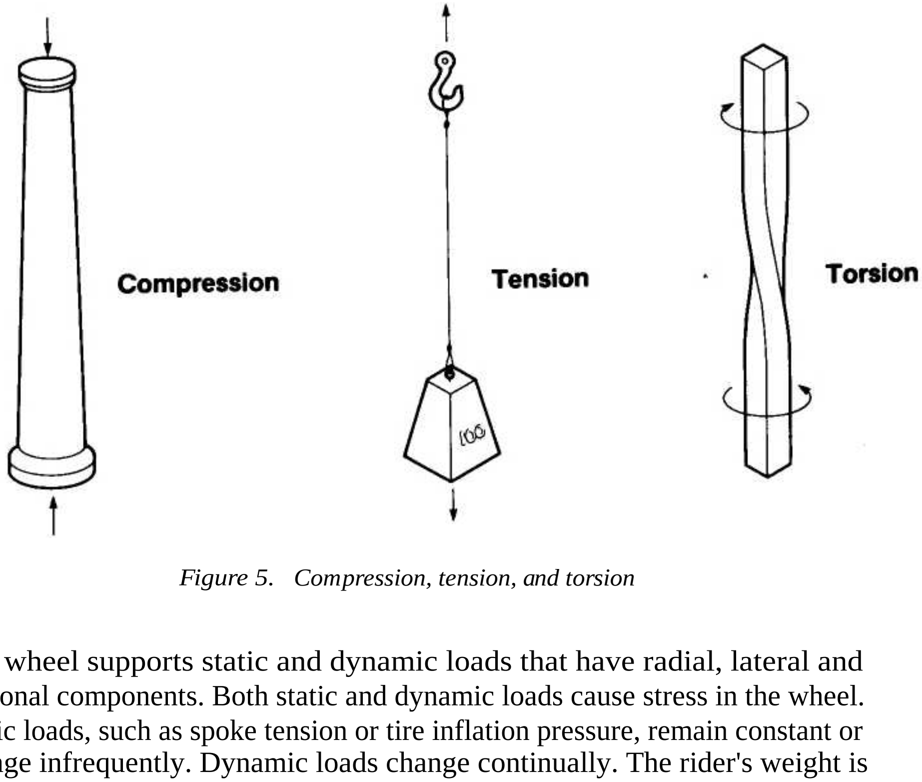

Figure 5. Compression, tension, and torsion

The wheel supports static and dynamic loads that have radial, lateral and torsional components. Both static and dynamic loads cause stress in the wheel. Static loads, such as spoke tension or tire inflation pressure, remain constant or change infrequently. Dynamic loads change continually. The rider's weight is a dynamic load because, although it is constant, the wheel's rotation causes it to produce changing forces within the wheel.

STATIC LOADS

SPOKE TENSION

Spoke tension is the primary static load in the wheel. In a 36-spoke wheel the force of spoke tension compresses the rim with a force of about a half ton (see Equation 7 in Part III). Total tension depends on the number of spokes and their individual tension. Spoke tension and the compressive force in the rim are directly related, and changes in one affect the other.

TUBULAR TIRE PRESSURE

Although spoke tension is the principal static load on the rim, tubular tire inflation has a similar effect. When inflated, the tire becomes fatter and shrinks in circumference. The resulting force depends on the tire cross section, cord angle and inflation pressure. A tubular racing tire, inflated to 0.86 MPa, for instance, shrinks with a force of 300 N (see Equation 8 in Part III). Its effect on spoke tension can be detected with a tensiometer.

Cords in a typical two-ply bicycle tire lie at 90 degrees to each other and at 45 degrees to the length of the tire. When the tube- shaped casing is inflated, it tries to expand and become fatter. In expanding, the cords move scissorlike becoming closer to parallel. As the cords try to shorten the tire, air pressure also tries to stretch it, so that an equilibrium angle of about 3 5 degrees is reached where the cord angle and lengthening effect are in balance. Hoses designed not to change length with pressure have this 35 degree angle built in.

CLINCHER TIRE PRESSURE

For clincher tires (used on most bicycles), air pressure in the tube pushes inward on the bed of the rim while the tire bead pulls outward on the hooked rim edge. These two forces cancel each other exactly; only the effect of the cord angle, as in tubular tires, causes a net inward force. That is, the bead does not pull out as much as it would if the cord angle force were absent, so the inflation force is not entirely cancelled by the bead pulling outward. For a specific tire cross section and cord angle, the constriction of clinchers can be computed by treating them as tubular tires and subtracting the open part of the tire casing.

Because measured spoke tension changes from tire pressure only to the extent of cord angle effects, it is apparent that the steel or Kevlar beads of clincher tires are not what support radial forces on hooked bead rims. The primary holding force comes from the clinching effect by which the bead of the tire is locked into the hooked rim by inflation pressure. To verify this, the steel bead wires of a high-performance tire were cut. After inflating this tire to operating pressure, it remained on the rim. This test was prompted by the observation that even tires that require great force to be stretched onto a rim, will lift off it and their tubes will explode if their beads are not properly seated in the hook on the rim.

NON CLINCHING TIRE PRESSURE

Because rims without hooked sides do not clinch the tire, they receive greater inward force from air pressure. The cord angle of the tire can have no effect on such rims because the forces in the tire are supported entirely by the bead. Although inflation pressure has a greater effect on these rims, they use low pressure tires, and the effect of their tires on rim compression is about the same as that of high pressure clinchers.

DYNAMIC LOADS

Dynamic loads have radial, lateral and torsional components that deform the wheel elastically. These deformations are generally too small to be seen because, as in many structures, even high forces cause invisibly small deflections. Loads cause stretch from tension (pull), shrink from compression (push), and rotation from torsion (twist). How stretch, shrink, and rotation occur will be clearer after investigating what causes loads and what they do to the wheel. Understanding the effects of loads will clarify how and why wheels fail.

Failures such as broken spokes and cracked rims and hubs are caused by dynamic loads. The static loads within the wheel, that are essential to its structure, do not contribute directly to failures. The rider's weight, amplified by bumps in the road, is the principal dynamic load supported by the wheel. Other radial, lateral and torsional dynamic loads are caused by pedaling, braking, and riding while standing. These combined loads cause all wheels to deteriorate gradually as they bend and twist elastically.

RADIAL LOADS

The weight of a cyclist riding straight ahead on a flat smooth road provides sufficient radial load to cause a wheel to deteriorate with age. Instead of trying to visualize forces as coming from a rider on a bicycle, the wheel can be viewed as having a hub fixed in space with forces of the road pressing up against it. Radial loads displace the rim toward the hub, lateral or torsional loads cause other displacements. The portion of the rim above the ground-contact area of the tire, the region that deforms from the weight of the cyclist, is the load-affected zone.

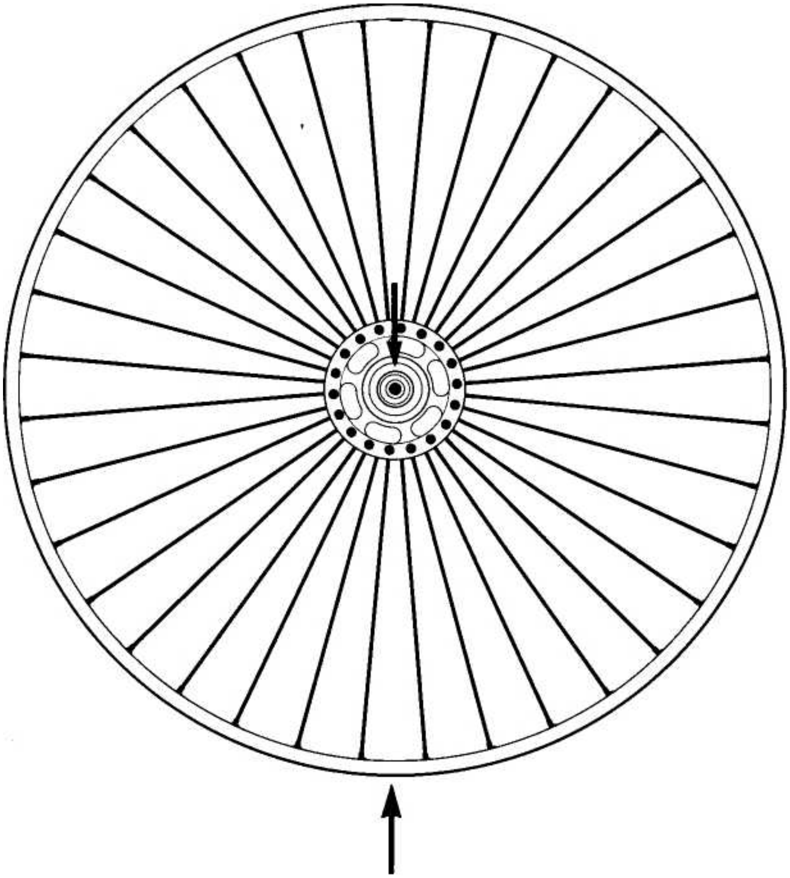

Figure 6. Radial loads

WHEEL DEFLECTION

Deformation of a loaded wheel can be measured with a spoke tensiometer, or detected in the tone of a plucked spoke. Although these methods work well enough to verify theory, they are cumbersome and not sufficiently repeatable to analyze wheel deflections precisely. For a precise analysis of deflections, a mathematical model was developed using the finite element method (FEM) for structural analysis.

To analyze radial loads by FEM, the wheel can be accurately approximated as a two dimensional (flat) disk. Rim, hub, and spoke dimensions and material characteristics are used to describe the elements of the wheel. Angular, radial and circumferential displacements of the rim at each spoke are computed using these values and a specific load. The results of these computations are displayed as diagrams of spoked wheels with exaggerated deflections to show the effects of radial loads as well as torque and braking. The corresponding input and output values are listed in Part III.

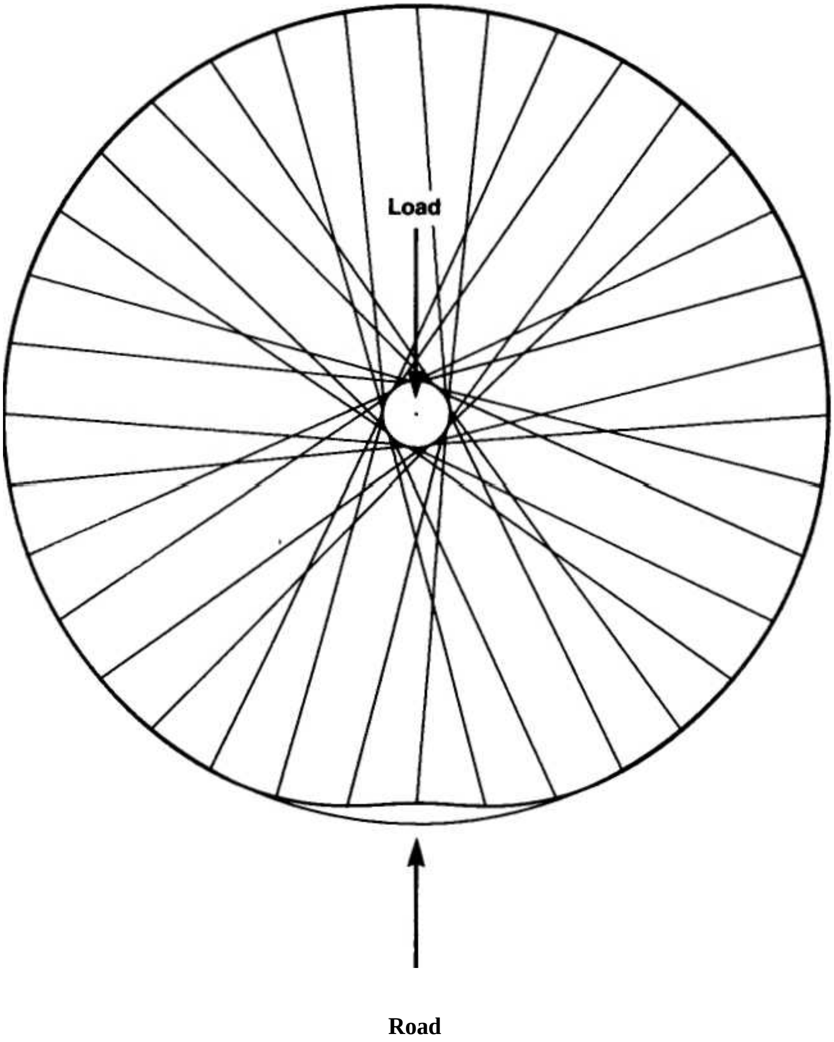

Figure 7. Radial load

In figure 7, rim deflection in the load-affected zone is exaggeratedso that what is actually a slight flattening appears as a smooth dent in the rim. The illustration shows that the diameter ofthe rest ofthe rim is slightly enlarged with small bulges at the ends ofthe flattened area. The increased diameter results from flattening the arch ofthe rim at its bottom. This increase in diameter causes a small and insignificant increase in spoke tension - less than four percent ofthe change experienced by the spokes in the load-affected zone. Because the increase in diameter is uniformly distributed around the rest ofwheel, it causes no net upward force on the hub. It does not make the hub hang from the top spokes as is sometimes suggested.

BRAKING LOADS

Braking with a caliper brake causes a small but significant radial load that affects spoke tension. Under hard braking, the brake shoes retard the rim with a force of up to 500 N by pushing rearward with 2 50 N force and pulling on the front half of the rim equally. This increases compression in the rear half of the rim and decreases compression in the front half about the same as the increase from tire pressure.

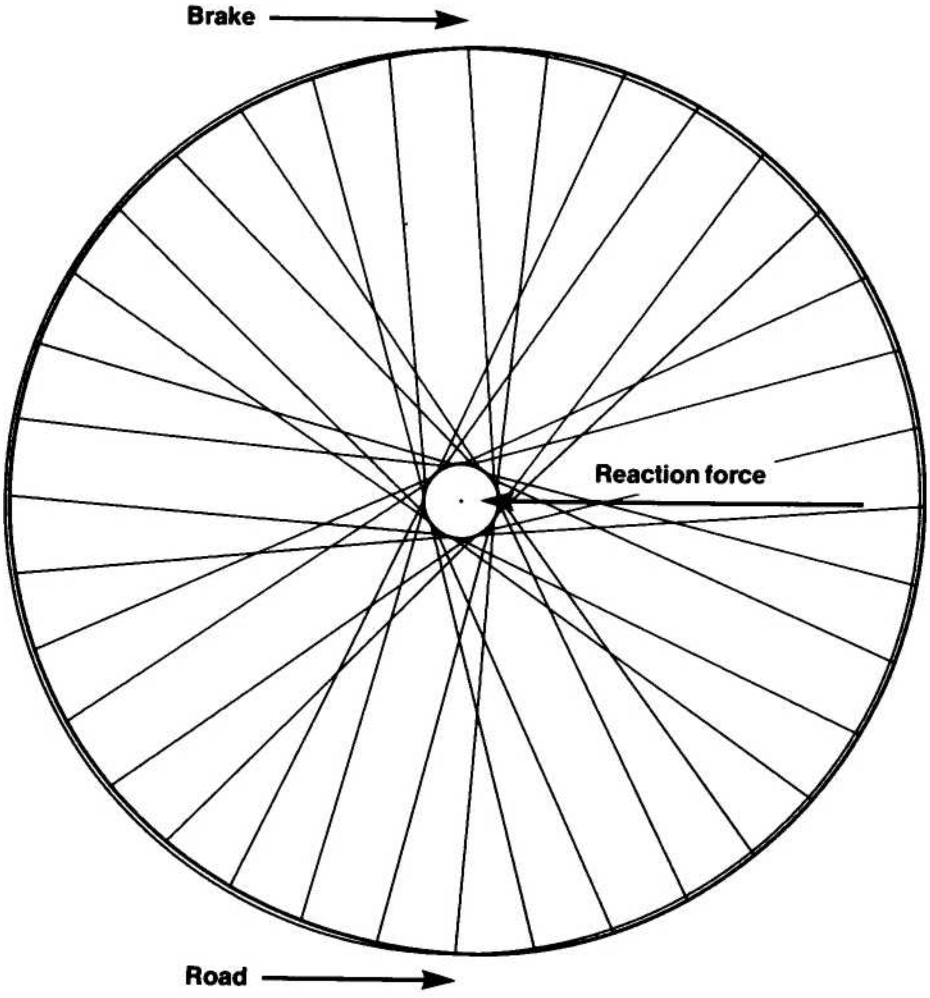

Figure 8. Braking load

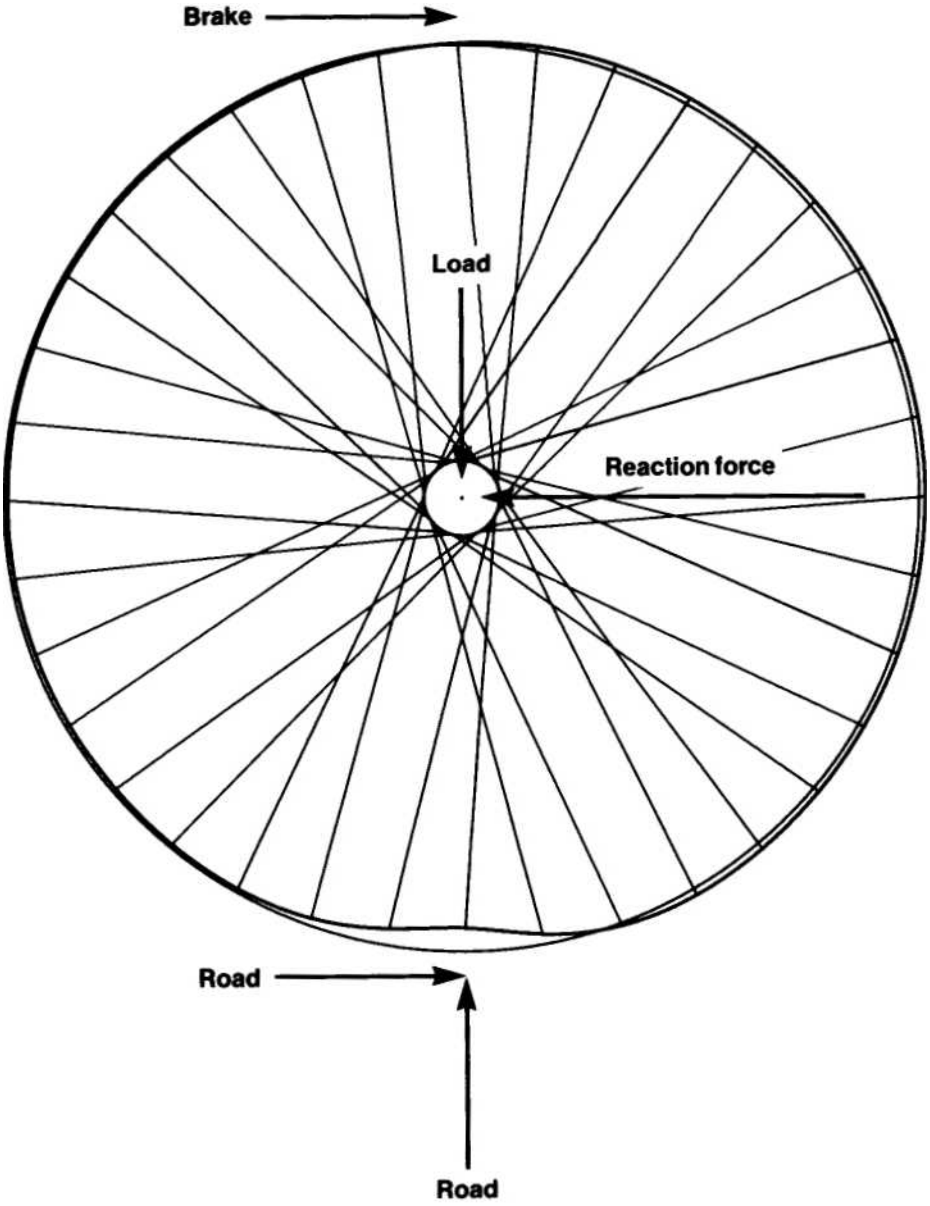

Figure 9. Radial and braking load

Spokes in the forward half of the wheel become about 5 % looser and ones in the rear, 5 % tighter. At the caliper and the ground contact point, where forces act on the wheel, there is little effect so tension remains unchanged. The bending stiffness of the rim and the direction of the braking force cause a smooth transition in spoke tension as the rim passes through the brake caliper. Of all the loads on a wheel, braking is the only one that causes an significant increase in rim compression, and severe braking can cause an overtensioned wheel to collapse into a saddle shape (pretzel).

LATERAL LOADS

Since a bicycle is ridden by balancing, lateral loads (that bend the wheel sideways) are usually small. Therefore, bicycle wheels need far less lateral strength than radial and torsional strength. Although wheels have lateral strength of only about one-tenth their radial strength, this is adequate because they are only subjected to major side loads during the loss of control before a crash. Normal side loads that occur when a rider leans out of the plane of the bicycle are small.

TORSIONAL LOADS

Torque is a dynamic load caused by pedaling or by a hub brake. Torque is a twisting force in the hub that produces or retards wheel rotation. As the chain turns the rear wheel sprocket it exerts torque on the hub. Torque is expressed in terms of a force and the length of the lever on which it acts. In the bicycle the force and lever are the tension in the chain and the radius of the sprocket. Spokes are flexible and cannot transmit torque by acting as levers, so they transmit torque from the hub to the rim by becoming tighter and looser. The lever arm is the distance by which the line of the spoke misses intersecting the centerline of the rear axle. The force is the total change in tension among the spokes, some of which become tighter, and some looser.

EFFECTS OF TORSIONAL LOADS

Pedaling causes nonuniform torque that varies during the pedal stroke and with rider effort. A hub brake, on the other hand, produces uniform torque, but its torque still causes dynamic changes as the wheel rolls. For a small-flange hub, torque from strong pedaling or braking causes tension changes as large as plus and minus 5 %. This is about the same as the effect of tire pressure, except that torque is a dynamic load and tire pressure is static.

Changes in spoke tension depend on the torque, the number of spokes, spoke pattern, and the flange diameter. The flange radius and the spoke pattern determine the lever with which torque acts on the spokes. For a given torque, spoke tension change (force) decreases as the flange diameter (lever) increases. However, even with small-flange hubs, the strongest pedaling has an insignificant effect on spoke life. These tension changes are small and few compared to those caused by just the radial load of the rider's weight on a smooth road.

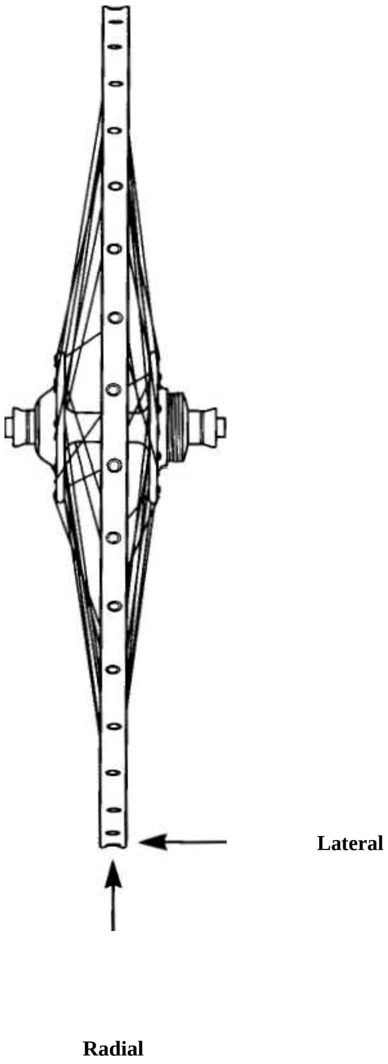

Figure 10. Radial and lateral load

PULLING AND PUSHING SPOKES

In a wheel with cross-laced spokes, torque, unlike other loads, affects all spokes equally but in opposite ways. Half the spokes become tighter and half become looser. All spokes are involved, not just the pulling ones. Torque is equal to the tension change, times the number of spokes, times the effective flange radius. Spokes that become tighter pull, and the ones that become looser push the rim around. The pulling spokes stretch and become longer, and the pushing spokes compress and become shorter. The rim bulges inward at the pulling spokes and outward at the pushing spokes while the average tension, and therefore average rim compression, does not change.

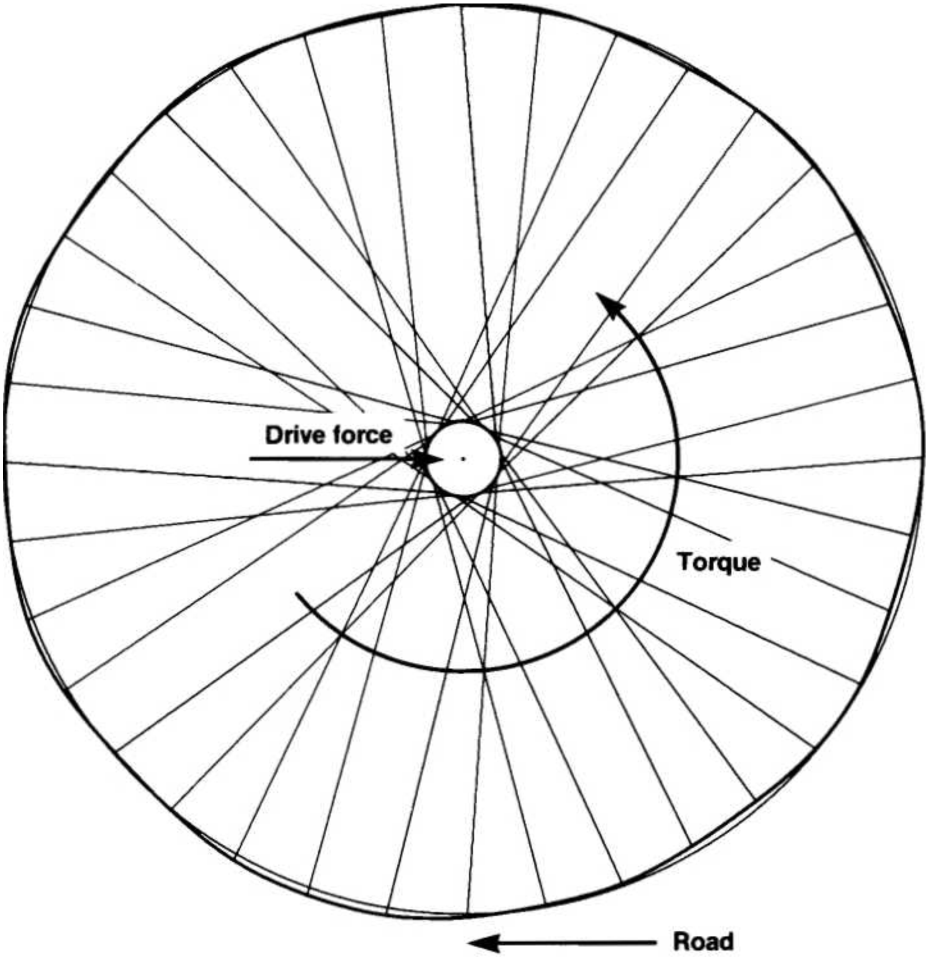

Figure 11. Torque load

Of course, the pushing spokes don't push in the usual sense because they are wires and are not in compression. In the tensioned wheel, however, they have exactly the same effect as pushing. In an unloaded wheel without torque, all spokes are in equilibrium and at the same tension. When torque is applied, spokes become tighter and looser in pairs and, except for their pretension, push and pull.

In the Figures 11 and 12 the effects of torque are first shown alone, then combined with a vertical load. Torque causes changes in tension that appear as waves in the rim. The waves in the left side of the wheel are above the average, and the ones on the right below the average. This difference arises because, in the diagram, the road pushes to the left. The rim responds to the pulling and pushing spokes as if they were rigid columns. The pulling spokes pull the rim inward, and the pushing spokes push it outward. Because they are tangent to the hub but point in opposite directions, they pull and push to produce torque in the same direction at the rim.

Because only radial dimensions are exaggerated in the figures, rotation displacements are not visible. Pulling spokes should appear longer than pushing spokes, but, because hub rotation is not magnified, this is not visible.

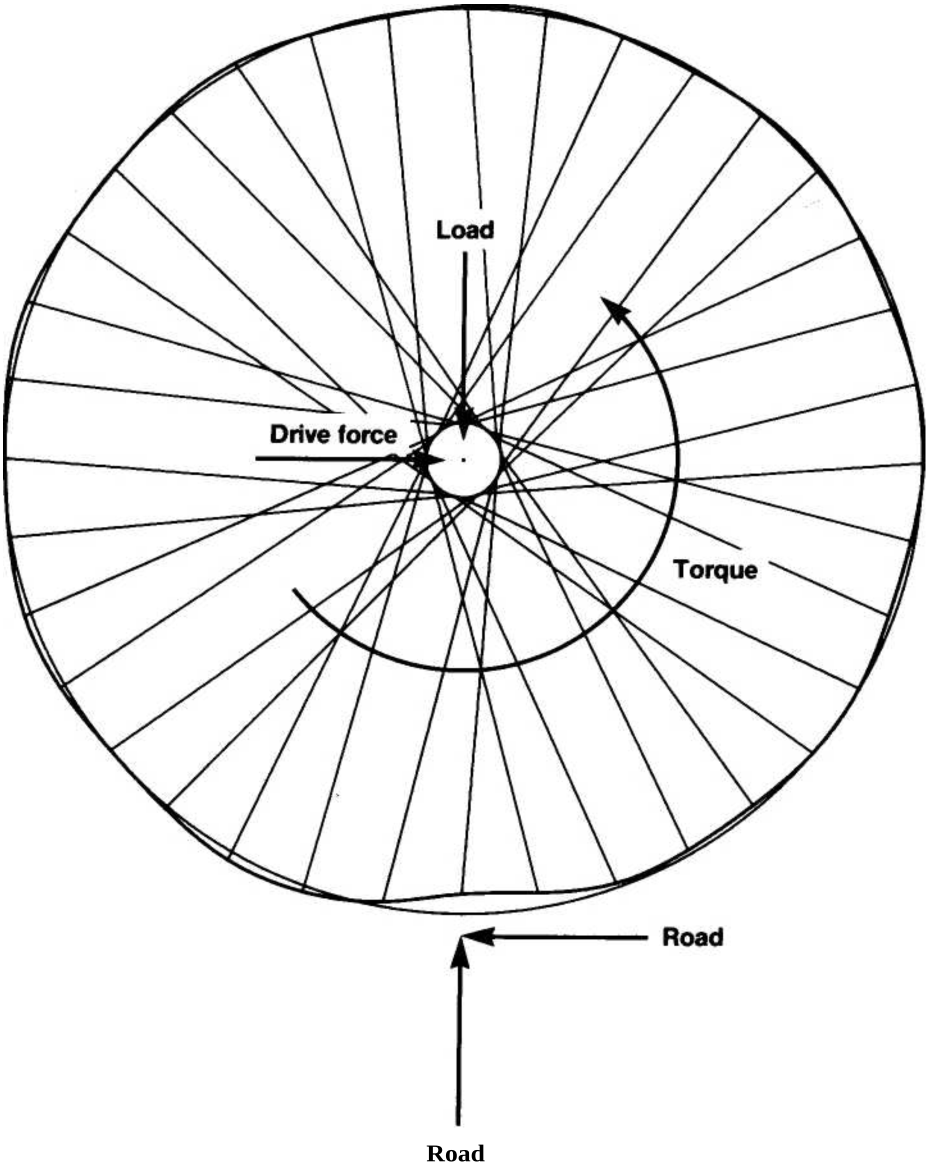

Figure 12. Radial and torque load

WHEEL FAILURE

In a broad sense, wheel failure means that through some defect, the wheel becomes unusable. For example, it may become so misaligned that the tire rubs on the frame or the brakes drag. Or it may get dents in its rim from hitting a curb or riding with insufficient tire inflation. Most wheels fail gradually by losing alignment, and this deterioration can be controlled. On the other hand, the sudden collapse of a wheel is caused - with few exceptions - by excessive side loads.

WHEEL COLLAPSE

Wheels can collapse from several causes, but the failure usually occurs the same way. The rim is forced to one side where the tire touches the ground, and the wheel takes on the shape of a saddle (or pretzel or potato chip). Another less common failure results from the rim breaking and releasing all spoke tension. This can happen when the wheel strikes a curb or falls into a grating in the road.

Most wheels collapse during crashes that cause large side forces. The rim may also receive a side force from an unusual maneuver such as a broadslide. However, radial overload can also cause a wheel to collapse. For instance, a bicycle landing from a sufficiently high jump could untension its bottom spokes on impact and leave its rim laterally unsupported. At this moment the wheel is unstable and will collapse to the side.

As a wheel deteriorates, loose spokes will continue to loosen - progressively faster - increasing the likelihood of collapse from both radial and lateral loads. However, wheels usually lose alignment to the point that they are unridable before their spokes loosen enough to allow collapse. The spoke threads of inexpensive wheels often rust solid and can no longer loosen, or for that matter, be retrued.

In Figure 13, wheel collapse is divided into stages as the wheel takes on the common saddle shape. Actually, the stages occur simultaneously, but their cause and effect can be described sequentially. As the rim is deflected to the left by the road, the ends of the deflected section lie at an angle to the plane of the wheel. Like a teeter-totter they push the adjacent parts of the rim to opposite sides causing an "M" shaped wave. The top of the wheel responds similarly to the ends of the "M". It moves to the left, the same as the bottom of the wheel, completing the saddle. Rim stiffness and spoke tension cause each of the four humps of the saddle to reinforce the adjacent humps until tension is lost. With small displacement the rim can spring back; but with larger displacements spoke tension decreases, and the rim yields, preventing a rebound.

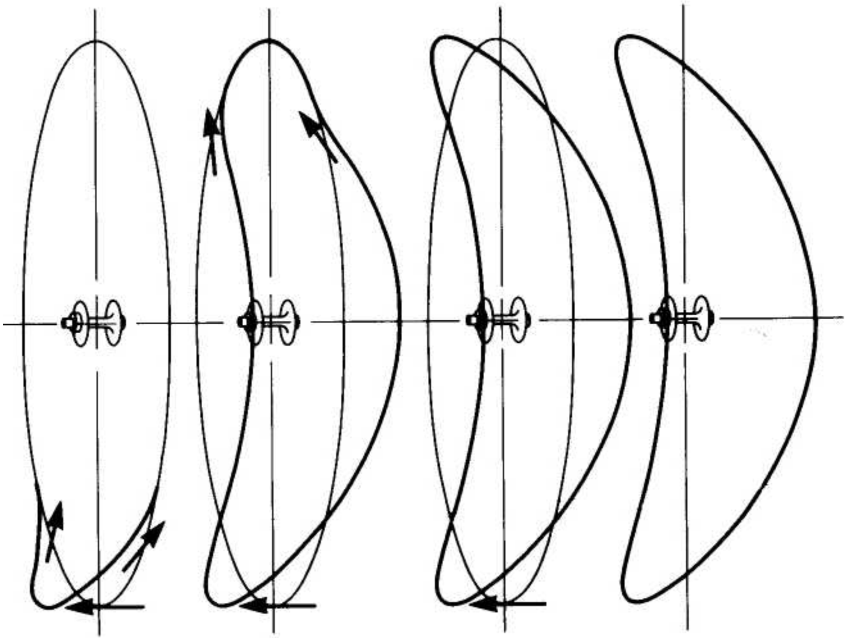

Figure 13. Wheel collapse

COMPONENT FAILURE

Spokes and rims are the wheel components that fail most often. They fail both from sudden loads, as in a crash, and from fatigue. Although the progression of fatigue failure is mostly invisible, it can be substantially retarded through appropriate wheel building techniques. Hubs and spoke nipples are not subjected to sufficiently large dynamic loads to cause significant metal fatigue. Aluminum nipples sometimes fail during wheel building, but rarely during use. Spokes break and rims crack mainly from fatigue. However, rims can also fail from brake abrasion. Road grit, swept up into the brake pads in wet weather, abrades rim sidewalls until they become too thin to contain tire pressure. They then bend outward and release the tire, causing a blowout.

METALS AND STRESS

Metals such as steel and aluminum are elastic and spring back if deformed or bent. If bent far enough, they take a set and do not return entirely to their original shape. The stress level from which a metal does not fully rebound is its elastic limit or yield point. Below its elastic limit a metal works in its elastic stress zone. Above the elastic limit it enters its plastic stress zone, and beyond its plastic zone is its failure stress at which it breaks. Brittle metals have little or no plastic region and break at their yield points. Bending causes tension on one side and compression on other side of a piece of metal as one surface stretches and the other shrinks. Both forces lead to failure.

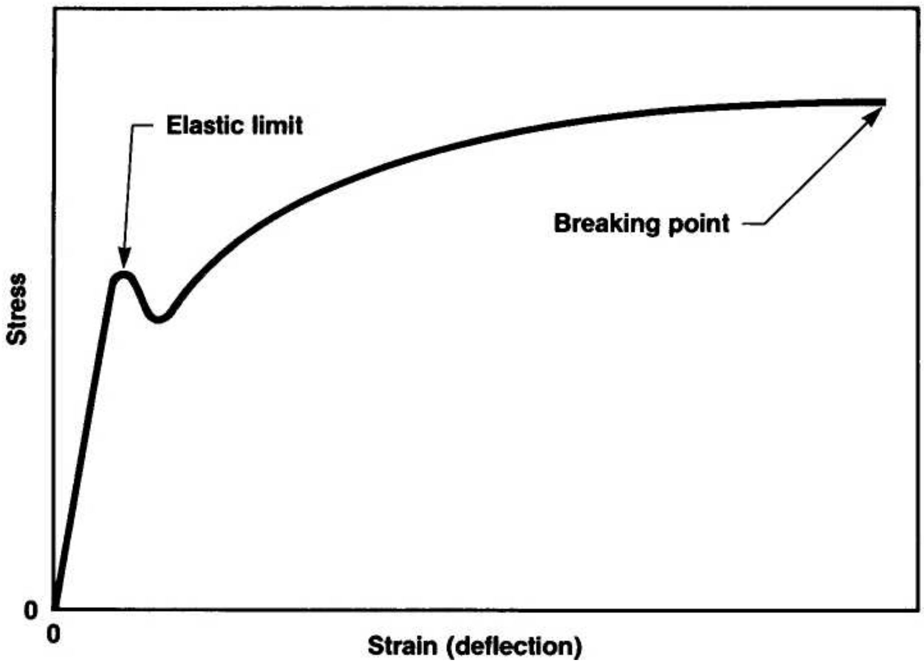

Figure 14. Stress vs. strain curve

METAL FATIGUE

Metals suffer from fatigue, but unlike a fatigued human, metal does not recover with rest. The fatigue limit is how often the metal can be stretched or bent back and forth in the elastic stress zone before it develops a crack and breaks. For most applications fatigue life is measured in millions of cycles. The closer a cyclic stress is to the elastic limit (the boundary between elastic and plastic zones) the sooner the material will break. The fatigue life of a metal depends both on average stress and stress change. Alone, static stress has no effect on fatigue, but, combined with dynamic stress, it does.

SPOKE FAILURE

Anyone who has had a spoke break can testify that it did not break at the outset of the ride, nor when the first bumps in the road were encountered. Yet most people who break a spoke attribute it to an event that occurred at the moment of failure. In fact, spokes break from fatigue, not excessive force, and they break when they pass the bottom of the wheel, at a point where they leave the load-affected zone and return to normal tension. So it is not the bump in the road, but leaving the bump that breaks the spoke.

Spokes are subjected to fatiguing cycles of changing tension with each wheel rotation. The elbow and threads are most affected because they have discontinuities where stress is concentrated. The threaded end of a spoke is also thinnest and therefore weakest at the bottom of the thread groove. Once a crack begins to form, the acute stress concentration at its root accelerates further cracking. Good surface finish is important in spokes because a smooth surface inhibits crack initiation.

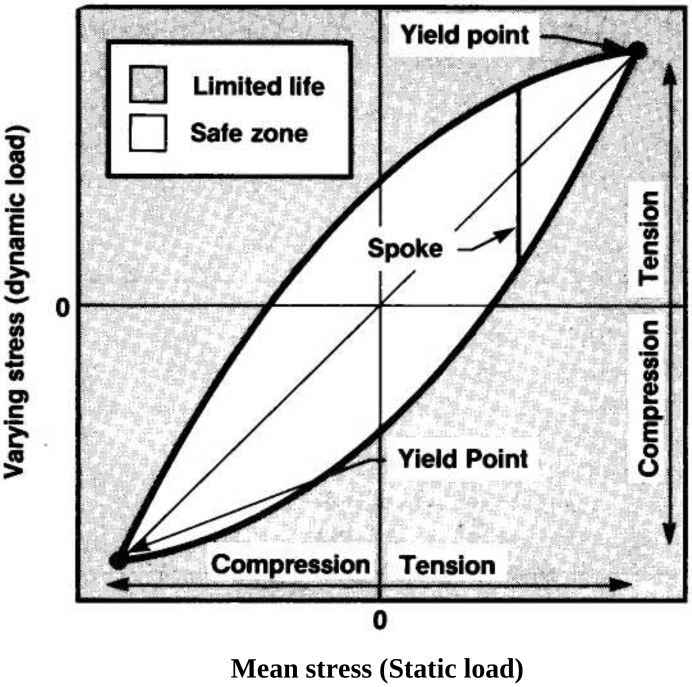

Figure 1 S. The fatigue life curve shown is for an ideal metal under stress. A material whose stress changes lie within this curve can withstand a nearly infinite number (millions) of stress cycles. The farther to the left or right of the center of the diagram the material is stressed, the smaller the permissible changing load for survival. For example, a spoke working close to its yield point can carry only small loads without early fatigue failure.

Spoke fatigue is caused by the combination of static load, the carried load, the distance traveled, and the number of spokes that share the work. The heavier the load, the more rapidly spokes fatigue. Fatigue failures and forced failures do not look alike. In a fatigue failure the two broken halves look as if they would fit back together. A forced break looks more like a snapped licorice whip. The material necks down, has stretch marks, and the two halves do not fit together. When a spoke breaks from fatigue, its separation crack is almost complete, and only a small part of its cross section remains to become a ductile, forced break.

Spokes that break during sprints or hard climbing all had fatigue cracks and were near failure. Failures from excessive pedaling force are practically impossible, because no cyclist is strong enough to produce the torque required. To receive breaking tension, a spoke must be pulled to one side by an obstruction. Torque will not do it. Such side loads more often break nipples than spokes.

Spoke fatigue is caused almost exclusively by the radial load from the weight of the bicycle and rider. Pedaling torque increases spoke stress no more than five percent. Although changes in tension from caliper brakes are about the same as from pedaling torque, they have little effect on fatigue because they do not occur at the load-affected zone and therefore are not added to the principal dynamic stress from the radial load.

In tension tests using new, high-quality spokes of various brands, all spokes tested, swaged (butted) and straight, broke at more than three times the maximum tension they could encounter in use (Fig. 68). And instead of breaking in the threads or at the elbow as they do in use, all over stressed spokes, failed in their midsections. These tests make clear that fatigue, in its various forms, plays a part in nearly every spoke failure.

REAR WHEEL SPOKE FAILURE

Torque is not what causes more spoke failures in rear wheels than front wheels. Rear wheel spokes fail more often because rear wheels carry more weight, receive more stress from the rigidity of the rear frame triangle, and most of all, carry most of their load on the spokes of the right side. To make room for multisprocket gear clusters, rear wheels are asymmetric. This asymmetry makes spokes on the right side at least twice as tight as the ones on the left. The load carried by each side of the wheel is in direct proportion to the spoke tension, so a 36-spoke rear wheel with a seven-speed gear cluster is, in effect, hardly more than an 18-spoke wheel. The greater the "dish" or asymmetry, the weaker the wheel and the sooner the spokes will break from fatigue.

In contrast, road shocks encountered by the front wheel are cushioned by the elasticity of the fork and by the top tube and down tube, that absorb these forces by bending. Together, the frame and the rider's arms absorb most of the peak loads on the front wheel.

RIM FAILURE

Rims usually fail during crashes or from hitting road hazards such as potholes and rocks that bend or dent the rim beyond repair. Rims also fail from fatigue. They can develop cracks around the spoke sockets and from one socket to the next. The cracks gradually weaken the wheel by releasing spoke tension. If the spokes are retensioned to retrue the wheel, they will eventually pull out of the rim. Such failures will probably not cause wheel collapse because the spokes pull out one at a time causing a wobble that prevents the wheel from being ridden further.

WHEEL STRENGTH

Looking at the bicycle wheel from the perspective of a structural engineer reveals why it has such great strength for so little weight. Its principal elements, the spokes and rim, are stressed almost exclusively in tension and compression instead of bending. The rim in fact, is stressed near its yield point. Aircraft and triangulated bridge structures also rely on tension and compression because these forces stress the material uniformly. In contrast, only the surface of a bending element is stressed, while the material inside lies idle.

Although great strength and light weight are clearly desirable goals for every high-performance wheel, these goals are mutually defeating. Wheel design is the process of reconciling them. The ideal balance between strength and light weight is hard to find. However, a standard wheel with 36 spokes is a good starting point. Deciding how strong a wheel needs to be and what components will give this strength requires an understanding of the effects of various spoke patterns, types of spokes, rims, and hubs. The durability of the wheel, its wind resistance, weight, and cost also come into play. For the wheel builder, ease of assembly is also important.

By understanding, for instance, why extra-lightweight rims do not work well in a 24-spoke wheel with thick straight gauge spokes, or why large-flange hubs probably won't improve a wheel, the pitfalls of poorly matched components can be avoided. It is generally better to be wrong in favor of strength than light weight. Understanding the trade-off between spoke weight and rim weight will make achieving the right balance between the two easier. In most cases it is best to build standard wheels - standard wheels, but good ones - and not yield to fashion, folklore, or advertising.

STRENGTH AND DURABILITY

Strength is a measure of the greatest load the wheel can carry before it collapses. Durability is a measure of how far the wheel will travel before it loses alignment. The two are related, but are not the same.

A wheel can collapse when the spokes in its load-affected zone become loose. The load that will cause collapse is roughly equal to the sum of the tension in four or five spokes. Therefore, the tighter its spokes are (up to a point), the greater a wheel's load capacity. Wheels have both radial and lateral strength. Although both improve with increasing spoke tension, lateral strength is mostly dependent on how far apart the hub flanges are spaced. If the spokes are sufficiently tight that they do not become slack from vertical loads, then both lateral and torsional loads are no concern because they are relatively small and usually do not occur in conjunction with extreme vertical loads.

A rigid rim combined with many thin spokes will give the longest load-affected zone and the best stress distribution. By lengthening the load-affected zone, a strong rim distributes loads over more spokes than a weaker rim can. Since thin spokes are more elastic than thick ones, they absorb larger rim deflections without becoming slack. The more spokes carrying the load, the stronger and more durable the wheel can be. Wheels used by professionals in classic road races have a good balance between strength and weight.

Because wheel strength is closely related to the number of spokes in the load-affected zone, the number of spokes per length of rim is kept about the same for different wheel sizes. A large wheel must have more spokes than a small wheel to achieve the same strength. High-wheeled bicycles, for example, with wheels 140 cm in diameter had about 80 spokes instead of the usual 36. For a common 36-spoke wheel, the load-affected zone spans about four spokes. Folding and other compact bicycles use 32 or 3 6 spokes not because they need that many, but because the most economical hubs are available only for these numbers.

If its spokes are tensioned to 1000 N, a 36-spoke wheel will support approximately 400 kg. This is considerably greater than the average rider's weight. However, loads of 400 kg or more sometimes occur when a wheel strikes a bump in the road at high speed. If such overloads occur often, the nipples of slack spokes can unscrew, reducing tension to affect both wheel alignment and strength. Although radial overloads rarely cause wheel collapse, they can make the wheel lose alignment.

In summary, a strong wheel is one with a large cross section rim and many thin, swaged spokes at high tension. A large, hollow cross section gives the rim bending and torsional rigidity as well as high resistance to buckling in compression. The load limit of a wheel is the load at which its spokes go slack. The compressive strength of the rim allows it to carry the force of the many highly tensioned spokes that give high load-carrying capacity. The bridging effect of a rigid rim lengthens the region over which the load is distributed, and a greater number of spokes means that there will be more of them in this region to carry the load. Swaged spokes (also known as butted spokes) take up these loads in their slender midsection. This reduces stress in their threads and elbows and extends fatigue life.

STIFFNESS

Stiffness, in its various forms, is a subject often discussed by bicyclists with regard to components as well as frames. Stiff wheels are often mentioned with approval. However, it should be noted that a bicycle wheel is so rigid that its elasticity is not discernible because the tires, handlebar stem, frame, and saddle have a much greater combined elasticity. Therefore the differences among well constructed wheels are imperceptible to a rider. The "liveliness" attributed to "stiff"wheels is an acoustic phenomenon caused largely by lightweight tires at high pressure and tight spokes with a high resonant frequency. This mechanical resonance can be heard, and possibly felt in the handlebars, but it is not related to wheel stiffness.

Stiffness is a measure of how hard it is to deflect the wheel or, more precisely, the ratio of load to displacement. Stiffness is not strength. For example, plaster of Paris is stiff, but not very strong. Since wheel stiffness is so often discussed, the various aspects of stiffness are treated here in more detail than they deserve. Wheel strength, and not stiffness, is the important consideration. If the wheel is strong enough for its intended use, then it is more than adequately stiff.

The terms `stiffness' and `rigidity' are often used when people talk about bicycles. Unless these terms are defined, they are just as vague as the even more popular catchall term `responsiveness.' These technical-sounding words can be misleading. Stiffness alone is not the ultimate measure of a good wheel, but rather the balance of stiffness and strength that enables it to carry loads and withstand shocks.

RADIAL STIFFNESS

Radial stiffness is a measure of the force required to deflect the rim radially. It is primarily influenced by the number and thickness of spokes and also by the depth of the rim. A stiffer rim extends the load-affected zone so that more spokes are affected, and it increases wheel stiffness. Spoke length also affects stiffness, but only in direct proportion to length. Spoke patterns have almost no effect on stiffness because spoke length differences among various spoke patterns are less than three percent.

Since tire elasticity is about one hundred times greater than spoke elasticity, the elastic differences between the shortest and longest spokes used in different spoke patterns amounts to less than 0.1%. Because the swaged portion of commonly used spokes of different lengths are mostly the same length, length differences among these spokes have even less effect than those of straight gauge spokes. As long as no spokes become slack, spoke tension has no effect on stiffness because elasticity is a function of the steel in the spokes not their tightness. This means that a loosely-spoked wheel is only weaker than a tightly spoked one, but not more elastic.

The suggestion that 18 inch wheels demand a bicycle with spring suspension may be valid, not because the wheels are stiff, but rather because small diameter wheels accentuate road irregularities. High wheeled bicycles that used solid tires were known as bone shakers in spite of their long spokes and large diameter wheels. The cushion of a bicycle wheel comes from its tires and its ability to smooth road irregularities from its diameter, not from spoke length or spoke pattern.

LATERAL STIFFNESS

A wheel's lateral stiffness resists sideways deflections of the rim. Flange spacing, rim strength, and the number and thickness of spokes all affect lateral stiffness. Flange spacing has an effect because it gives the spokes a broader base (bracing angle) from which to restrain lateral motion. The more a spoke pulls to the side, the greater its lateral support. For a given hub width, lateral stiffness increases with smaller diameter rims. And, if the number of spokes remains the same, they become more closely spaced along the rim. Through these effects, a nominal 26 inch rim on a standard front hub is laterally about 10% stiffer (and stronger) than an identical 27 inch rim. This difference arises from the ratio of their effective diameters of 622/559 mm. As with radial stiffness, a stiffer rim increases lateral stiffness because it spreads the load over more spokes. More spokes and a stronger rim increase lateral stiffness.

Asymmetry in a rear wheel built for a multispeed gear cluster makes it weaker against side loads coming from the right side. This means that the wheel bends to the left more easily than the right. The greater the offset, the weaker the wheel. In order to reduce offset for six-, seven- and eight-speed clusters, hubs have been built with narrower flange spacing. Although they reduce the disparity in tension between left-side and right-side spokes, they weaken the wheel against lateral forces.

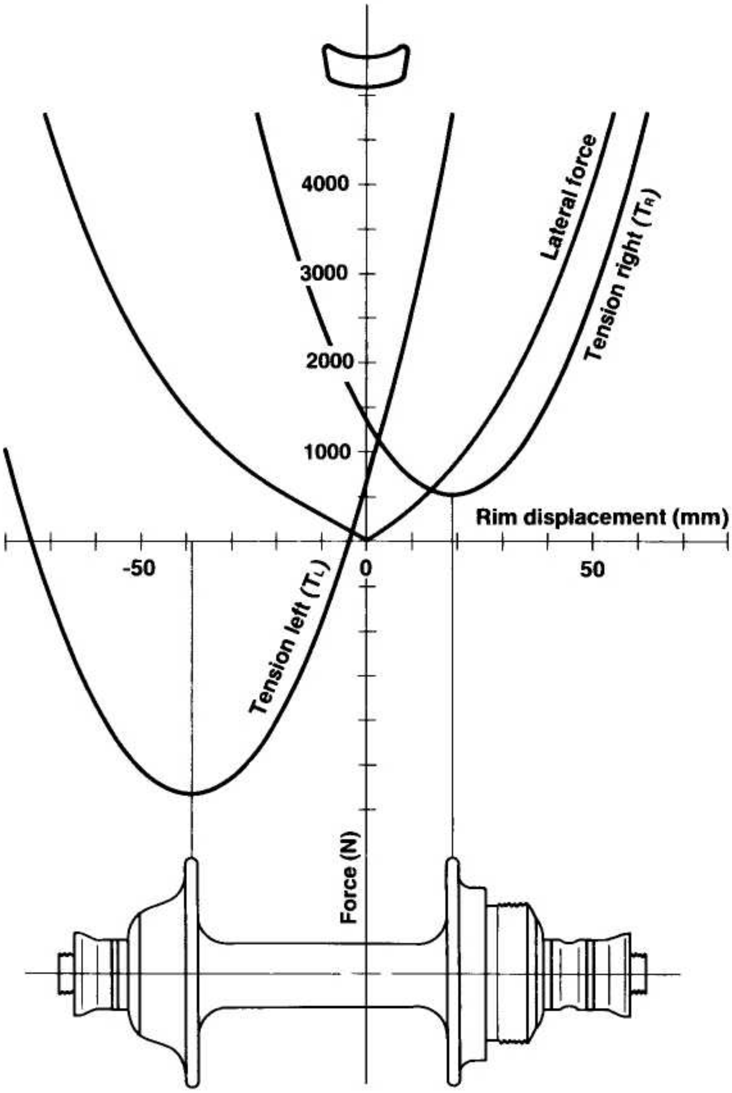

Figure 16. A typical six-speed rear wheel is shown in cross section. The horizontal scale in this graph ***(mm)*** *represents the actual hub dimensions. The curves show the change in spoke tension and the force required to displace the rim and cause these tension changes. The left spokes become slack for even small rim deflections to the left while the right spokes remain tight for the range of displacements shown. This wheel is twice as stiff for deflections to the right as to the left. The graph can be verified by observing that, when unlacing a rear wheel, the right spokes do not become slack if left side spokes are removed first.*

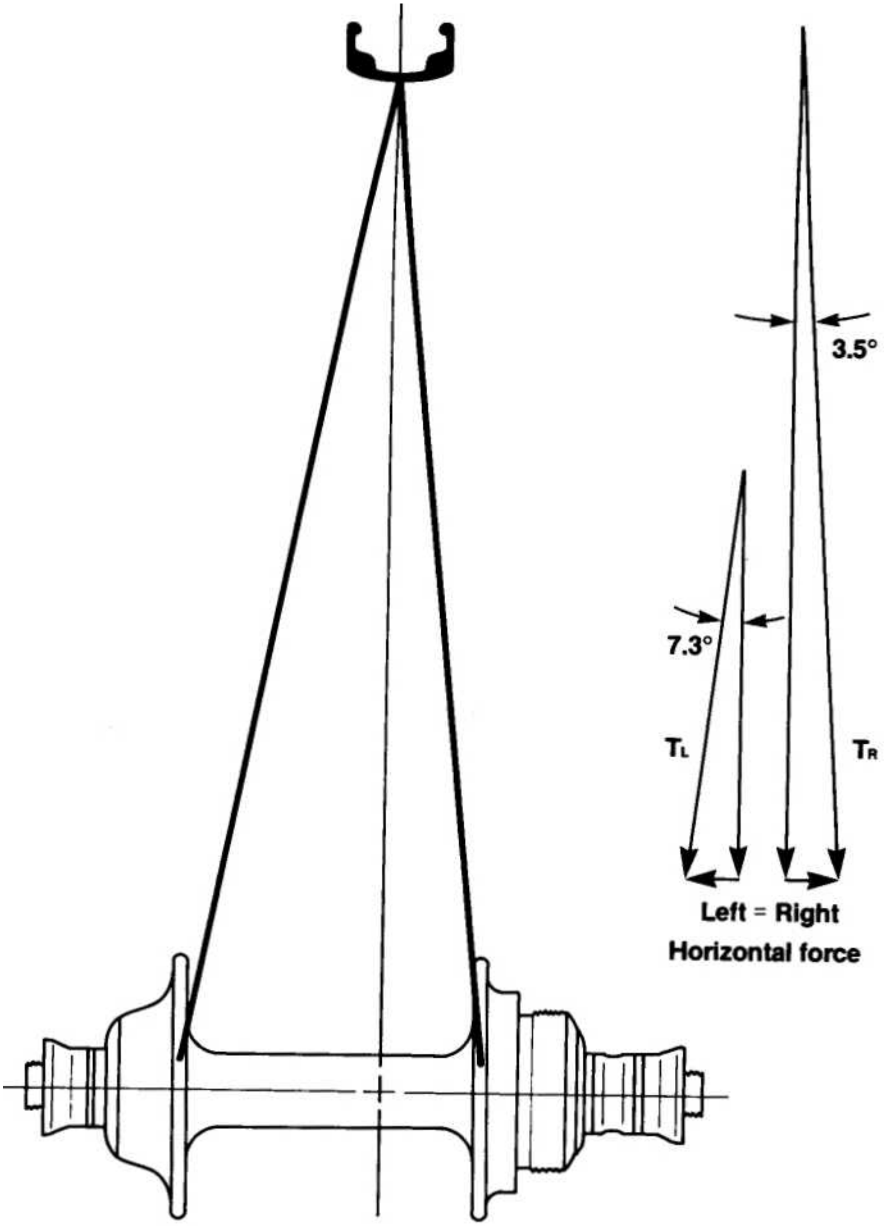

Figure 17. Spoke tension in offset rear wheels

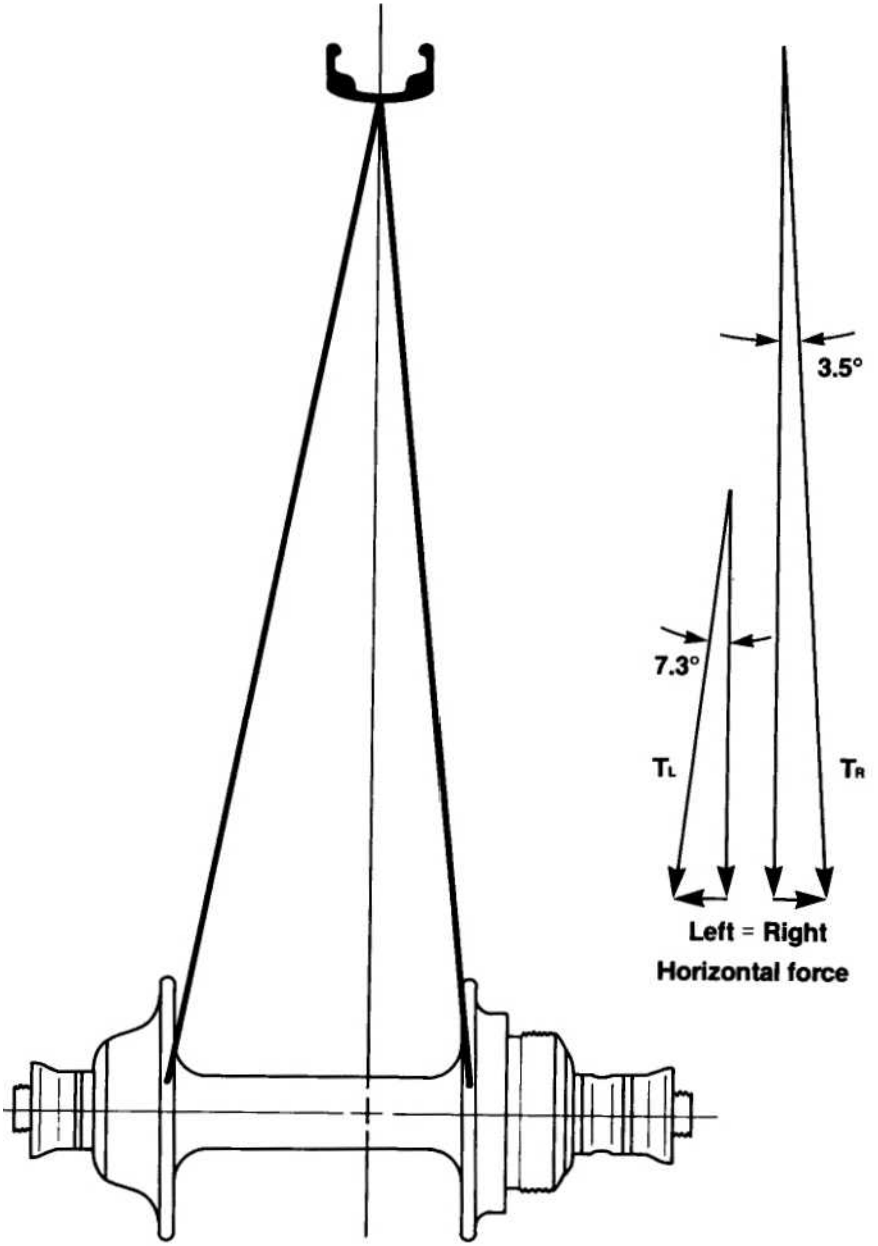

Figure 17. Spoke tension in offset rear wheels

TORSIONAL STIFFNESS

The terms stiffness and strength are so closely related they are practically interchangeable for driving torque in wire spoked wheels. Although torsional stiffness for most well-built wheels is more than adequate, the effect of torque on spokes, rim, and hub is worth investigating. The following is not intended to help in selecting suitable components, but rather to show what effects the components have, even though these effects may have no significance in use.

Torsional stiffness resists torque that tries to rotate the hub relative to the rim. How far the hub rotates with respect to the rim is called hub windup. Rim strength, spoke thickness, spoke pattern, and flange diameter all affect torsional stiffness. Rim strength plays only a minor role, while spoke thickness has a squared effect: when the spoke diameter doubles, its stiffness increases fourfold. Hub diameter and spoke pattern (that determine the effective flange diameter) also have a squared effect. For a given number of spokes, torsional stiffness is proportional to the effective flange diameter squared. (See Fig. 18.)

The effective diameter of a flange depends on the spoke pattern. Radial spoking makes the effective diameter zero because the extended line of the spokes passes through the center of the hub, while a crossed-four pattern (for 36 spokes) gives full effect to the flange diameter because the spokes leave the hub at a right angle (tangent to the hole circle). A larger flange gives a longer lever arm on which the spokes act. For the same windup, a larger flange also produces more movement (spoke stretch). Thus, a flange that is twice as large gives twice the change in spoke tension as well as providing twice the lever arm producing four times the torque for the same windup.

Radial spoking represents a special case because the spokes pull directly across the hub and transmit no torque. However, even the slightest torque causes windup that makes the spokes no longer radial. When torque is applied, the hub winds up. After windup all spoke tension acts directly on the lever caused by the windup to turn the wheel. With crossed spoking there is almost no windup, and a change in tension of pulling and pushing spokes moves the wheel. For radial spoking the effective hub diameter is the slight offset of the spoke line from the hub axis on which the total tension acts to transmit torque to the rim. Although they work, radially spoked rear wheels have significant drawbacks described under "radial spoking."

For most small-flange hubs with 36 spokes, crossed-three is a good reliable spoke pattern. However, crossed-four will work on most 36-spoke rear hubs because they are large enough to prevent the spoke gridlock from overlap that occurs on smaller hubs. Overlap prevents insertion and removal of adjacent spokes because their heads are blocked by their neighbors.

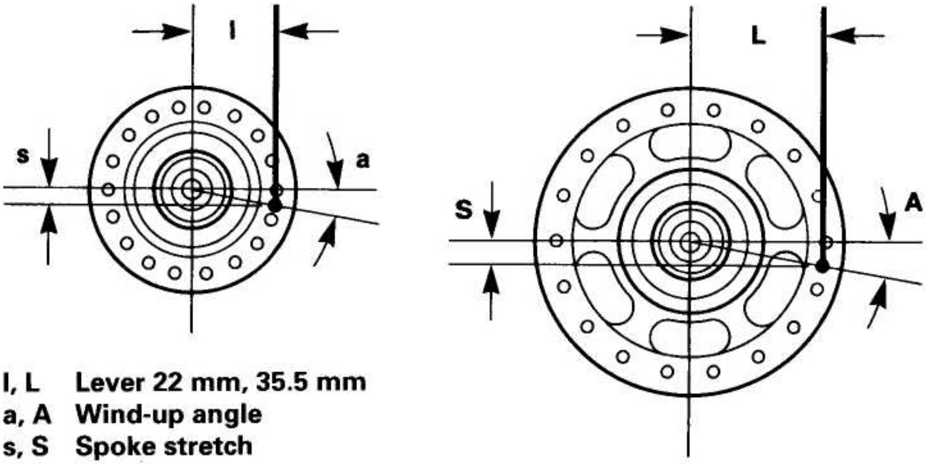

Figure 18. Torsional stiffness of typical small and large flange hubs

ENOUGH STIFFNESS

Although it is worth analyzing, stiffness is not an important consideration in wheel design. Components and spoke patterns should be selected for strength and durability. A wheel that is strong enough to withstand the loads of its intended use is also stiff enough. Stiffness is often put forth as an excuse for peculiar designs. "It makes the wheel stiffer," is often claimed in defense of an unconventional design. However, some of the world's strongest cyclists have ridden the kilometer time trial on 24-spoke small-flange wheels with light-weight rims. Although this event requires precise control and enormous starting torque that exceeds nearly all stiffness and strength demands of other cycling, these racing wheels are adequately designed for their specific use. They lack the long-term durability of road wheels, but they are stiff enough.

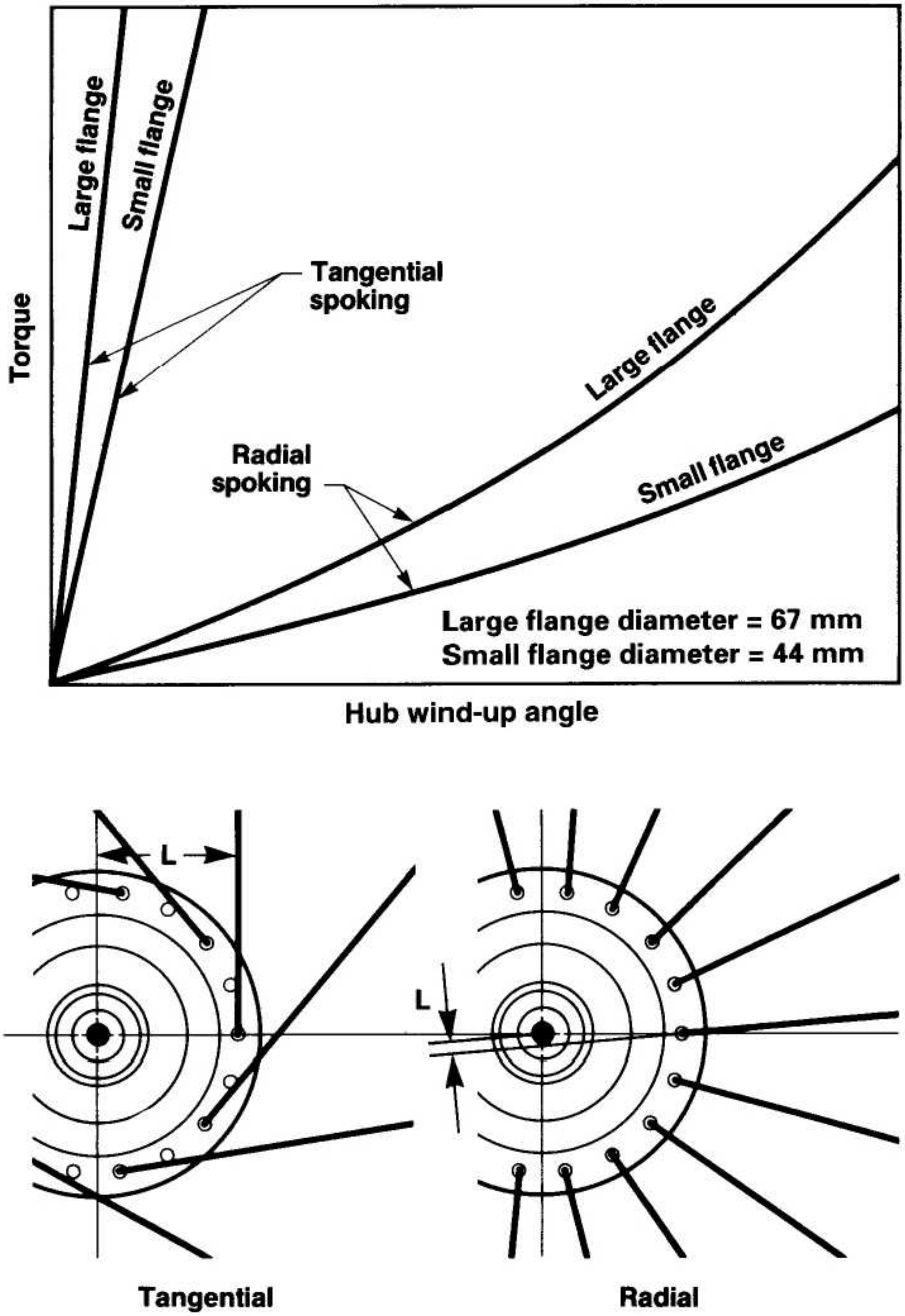

Figure 19. Torque stiffness of crossed and radial spoking

COMPONENTS

Selecting only high-quality components helps insure that high-quality building does not produce mediocre wheels. High quality means durable and reliable, not esoteric, super light, or trendy.

Rims, hubs, spokes, and nipples are made in many shapes and from several materials. Rim materials include wood, steel, aluminum, titanium, composites, and other materials. Spokes, although usually round and made of steel, are also made in oval and flat forms, and from nonmetallic fibers. Material and design differences affect performance, durability, cost, ease of assembly, and appearance.

The role of the hub in the wheel is simple because it needs only to have aluminum flanges of good design with the right size holes. The hub's complexity lies in its axle and bearings, and, for cassette hubs, in its freewheel, but these elements have no effect on the structure of the wheel. The important component choices are the weight and shape of the rim, and the number and thickness of the spokes. This is more complex than one might suspect.

SPOKES

Spokes are the most highly stressed parts of the wheel and require special care in assembly if the wheel is to work reliably. Most bicycle spokes have a head and elbow at one end, and about eight millimeters of threads at the other. The majority of spokes have the same standard design, but spokes with special features such as aerodynamic shapes and elbow-less ends are also available. Common round spokes for high-performance bicycles are made in four standard types: thick and thin swaged, and thick and thin straight gauge. Spoke length is measured from the inside of the elbow to the tip of the threaded end.

A wide range of spoke thicknesses is available, from the lightest bicycle sizes to heavy ones for motorcycles and automobiles. However, for bicycles the most common spokes are 1.8 and 2.0 mm in diameter, also called 15 and 14 gauge. The larger the gauge number the thinner the spoke. They are available in uniform thickness (straight gauge) or with midspans reduced in diameter by about 20% (swaged). Swaged spokes are often called butted, a term that incorrectly suggests that their ends are made thicker.

For a number of manufacturing and functional reasons, most spokes have a round cross section and are made from round wire. Spoke ends must be round for the thread and to allow the elbow to rotate in the flange to accommodate different spoke patterns. Round spokes best resist torque produced by tightening nipples during wheel building. In torsion, a round cross section makes the best use of material. Torsional stiffness is proportional to the fourth power of the diameter (or thickness for flat spokes). From this relationship it is apparent that round spokes have substantially greater torsional strength than flat spokes. Flat spokes are made from round spokes as their round ends reveal.

STRAIGHT SPOKES

Spokes are made from continuous rolls of wire. After the wire is straightened, a piece is cut off, a head is formed on one end, and then it is cut to a precise length. After the thread is rolled on, the head end is bent into an elbow. The elbow bend is greater than 90 degrees so that it will fit both on the inside and outside of hubs. Since the entire spoke is cold formed, it is made tougher through work hardening. However, cold forming also locks in stresses that can accelerate fatigue unless they are relieved after a wheel is built. Rupture tests confirm that spokes are work hardened. Straight gauge spokes do not break at their elbows and threads where they have been worked the most, but most fatigue failures occur at these places.

SWAGED SPOKES

Spokes are in pure tension at midspan where they do not need to resist bending, so they can be swaged thinner there without sacrificing strength. Swaged spokes are made by drawing regular spoke wire through a reducing die. After swaging, the unreduced ends are formed the same way as unswaged spokes. The diameter reduction increases spoke elasticity, increases strength by work hardening, and reduces weight. However, the most valuable contribution of swaging is that peak stresses are absorbed in the straight midsection rather than concentrated in the threads and elbow, thereby substantially reducing fatigue failures. Swaged spokes act like strain screws commonly used in high-performance machinery.

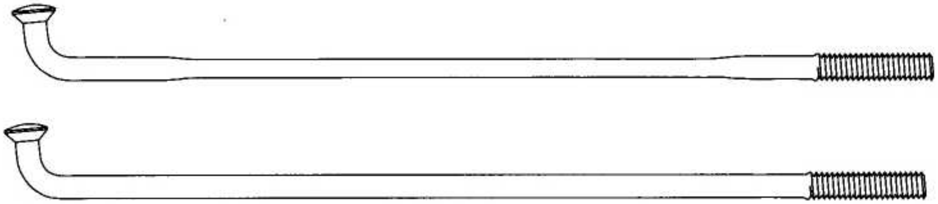

Figure 20. Straight and swaged spokes

ELBOW-LESS SPOKES

Because spokes often fail at the elbow, hubs that use straight, elbow-less spokes have been designed to avoid the bending stress that causes these failures. Some early high-wheeled bicycles used straight spokes in a radial pattern with heads at the rim and threads in the hub. A recent variation on this design used hubs with threaded flanges and straight elbow-less spokes threaded at both ends with conventional nipples at the rim. The drawbacks of this design are that hubs must be drilled for a specific spoke pattern and removing ends of broken spokes is difficult.

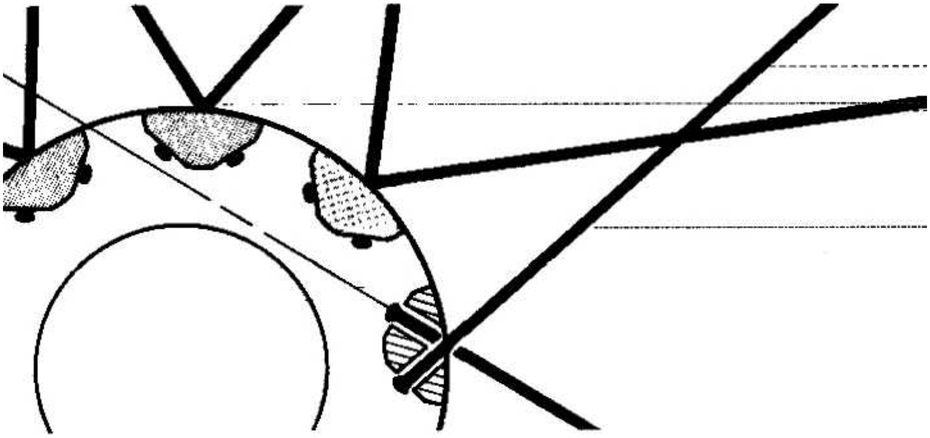

Figure 21. Hub with elbow-less spokes

Another more promising design, found on some motorcycles, uses spokes similar to the conventional kind, but without an elbow bend. These spokes project from outward facing cup-shaped flanges to the rim where they are tightened by standard nipples. This design has not become popular for bicycles because it allows only one spoke pattern and the hub is large and heavy. Also in this design, the head of the spoke is its weakest part because the grain structure of the material there is disrupted and weakened. Failure of this kind of spoke occurs mostly at the head, whereas the heads of spokes with elbows are stressed significantly less.

FLAT AND OVAL SPOKES

Flattened spokes are made to reduce wind drag, but their resistance to twist is so poor that they are difficult to tighten properly without giving them a corkscrew twist. Even after a wheel is built, twist continues to be a problem with flat spokes. Their lack of torsional strength allows them to gradually turn crosswise from the unscrewing force of road shock and increase wind drag rather than reduce it. Also, spokes that are twisted during truing will untwist during use, leaving the flat face instead of the edge of the spoke to face the wind. Both oval and flattened spokes are rolled from straight gauge wire and have as good or better tensile strength in their flattened parts as the original wire. Although they are strong in tension, their poor resistance to twist and their need for special holes in the hub flanges makes them inadvisable for general cycling use.

OTHER SPECIAL SPOKES

To give the appearance of great strength, some mountain bike spokes have been made extra thick and neck down to a standard 2.0 mm threaded end . These spokes lose strength instead of gaining it because they concentrate stress in their threads, a vulnerable zone even on conventional spokes. Conventional spokes are more than strong enough for mountain bikes that have the advantage of smaller wheel size. The fear that they are too weak may have originated during the early days of mountain biking when low-quality 26-inch wheels from inexpensive fat-tired bicycles were used.

Headless, zigzag-elbow spokes for insertion "head first" are not a panacea either. Although they are easier to replace when they break next to the freewheel, and flat spokes of this type do not require slotted flanges, the cost of getting rid of the spoke head is that these spokes squirm their way out of their flanges under high tension. If tension is kept low to avoid this weakness, wheel strength is compromised.

SPOKE THICKNESS AND PERFORMANCE

Although swaged spokes are more expensive to manufacture and slightly more difficult to true, they give more durable wheels because they are more elastic than straight gauge spokes. Their thin midsections stretch more, and they can be made just as tight as straight gauge spokes. Under load, they resist loosening better than straight spokes because they allow greater rim deformation before becoming slack. Their resilience helps the rim distribute loads over more spokes and reduces peak stress changes. Swaged spokes are also lighter without giving up strength. Their ends are identical to those of straight spokes, while the midsections are toughened by diameter reduction.

Straight gauge spokes cost less than swaged spokes because they are simpler to manufacture. Their greater resistance to twist makes them easier to adjust than swaged spokes, and their greater stiffness reduces elastic interactions between spokes simplifying truing. Straight gauge spokes are often used in racing because they facilitate rapid wheel building and, when a spoke breaks, wheel alignment suffers less than with swaged spokes.

Stress is greater at the spoke ends than at midspan. Spoke elbows not only carry the entire tension, but also the bending forces that try to straighten them; and a spoke's smallest cross section occurs in its threads. The greater stiffness of straight gauge spokes subjects them to higher stress by concentrating loads over fewer spokes. They have higher stress in their elbows and threads and also higher average stress, so they have a shorter fatigue life than identical swaged spokes. Their stiffness allows them to become slackwith smaller rim deflections, permitting nipples to unscrew.

To counteract loosening, some wheel builders secure spokes by various methods. For wheels with tubular tires, some rim glue is sometimes put in the rim sockets to secure nipples. For clinchers a nonhardening thread-locking adhesive or a sticky spoke thread lubricant can be used. Linseed oil works moderately well. Crimping nipples damages them and is not effective. However, if the rim and spokes are properly matched, the wheel will stay true without adhesives. They are an indication of a poorly matched wheel and not an essential component.

SPOKE THREADS

Most spokes, both 1.8 and 2.0 mm diameter, have 56 threads per inch (about 0.45 mm pitch). Some 1.8 mm spokes have been made with a finer 0.4 mm pitch thread that has several advantages. Finer thread allows finer adjustment. Because it advances less each turn, a spoke with finer thread tightens with less torque, thereby reducing spoke twist. These spokes are also stronger in the threads because the grooves are not as deep. The most important feature of a finer thread is that it prevents accidentally using 2.0 mm nipples on 1.8 mm spokes. If a 2.0 mm nipple is used on a 1.8 mm spoke, the mistake may not be discovered until final tensioning, when the threads strip.

Spoke threads, as most machine screw threads, are formed by rolling, not cutting. The spoke is rolled between two flat thread dies with thread profiles on them. The process is similar to rolling modeling clay into a rope between your hands. The rolled thread is stronger than a cut thread because it is forged into the material instead of being cut. A rolled thread is easily recognized because its diameter is larger than the spoke wire onto which it has been formed.

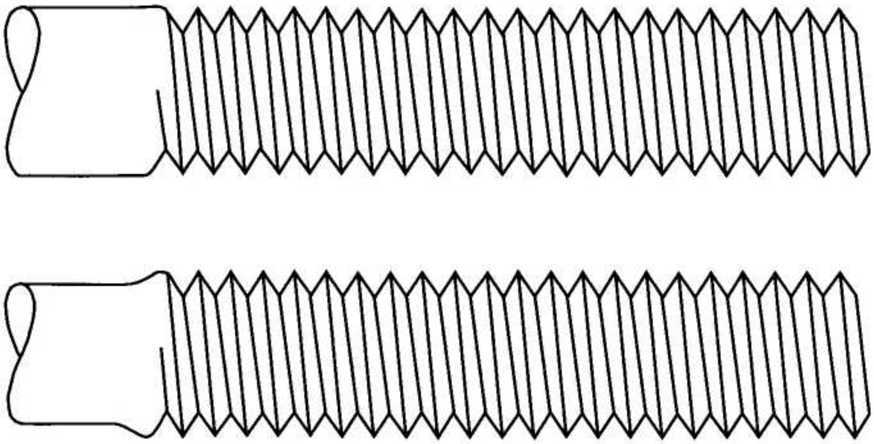

Figure 22. Cut threads (top) and rolled threads (bottom)

SPOKE TWIST

Spokes are, in effect, very long screws. Because they are so long, they act like long springy torsion bars, especially when they are tight and friction in their threads is high. 2.0 mm spokes have about fifty percent greater torsional stiffness (resistance to twist) than 1.8 mm spokes, and straight gauge spokes have about fifty percent greater torsional stiffness than swaged spokes.

During tightening, spokes twist as their nipples are turned. Torque that twists spokes comes from the thread ramp and from friction. Thread steepness is a function of thread pitch and diameter. Steep threads resist spoke tightening and aid loosening. Frictional torque at a given tension depends on spoke diameter and spoke and nipple materials. It can be reduced significantly by lubrication.

When a wheel with residual twist in its spokes strikes a bump, the spokes will screw in or out of their nipples depending on the direction they are twisted. Spokes that untwist cause alignment errors that require retruing. A wheel that has been built properly will not need retruing unless the rim is bent from an exceptional force.

To eliminate residual spoke twist during final tensioning, each nipple should be overtightened then backed off by as much as a quarter turn. The amount of overtightening should match the amount of twist that must be backed-off (untwisted). A practiced hand can feel the twist-free position because, at this point, the nipple turns in either direction with equal torque.

SPOKE MATERIALS

Although titanium and aluminum spokes have been made, they have few advantages over steel and many disadvantages. Aluminum alloy spokes have less strength and poorer fatigue resistance than steel spokes, and titanium spokes have a special problem of galling in the threads. Steel is less expensive than other materials, and it resists wear from fretting motions at the hub better. Most spokes are either stainless steel or steel with plating to prevent corrosion. Chrome- and nickel-plated spokes are brighter than cadmium- and zinc-plated spokes, but they rust more easily.

Wheels with plated spokes are difficult to retrue after exposure to wet weather because their spoke threads rust making the nipples difficult to turn. Stainless steel spokes, although more expensive, are nearly as bright as chrome-plated spokes and do not require polishing. Plated and stainless spokes can be made equally strong, but lasting wheels are usually built with stainless spokes that do not deteriorate from exposure to weather. Chromed spokes have their place, especially together with polished aluminum rims under the lights at six day races.

NON METALLIC AND COMPOSITE SPOKES

Non metallic fibers developed for military and aerospace uses have desirable material properties that come with high cost and, in some cases, undesirable properties. These materials may make light spokes, but all of them have clearly identifiable disadvantages compared to steel. In thin strands that are strong enough for the task, carbon fibers are too thin to withstand torque of conventional tensioning. Besides currently being expensive, they defy attachment to a hub and rim in a practical manner, are fragile, and are weather and humidity sensitive. Kevlar does not have a suitable elastic modulus to directly replace steel and has some of the same problems as carbon. Composite spokes - carbon wrapped around an aluminum core - require an ungainly hub and have high wind drag.

SPOKE NIPPLES

Nipples are both the spoke anchors and the means for truing the wheel. Most spoke nipples are brass, although some are made of aluminum or steel. Aluminum is one-third as heavy as brass, but it is also softer and weaker than brass. Special care must be taken not to round the corners of aluminum nipples with the spoke wrench or to strip their threads. Steel, although stronger than brass, rusts easily, and nipples with rusted threads are useless if the wheel needs retruing. Brass is the best nipple material for bicycle wheels because it acts as a bearing, allowing the nipples to turn smoothly on steel spokes and rim sockets.

Brass nipples are usually plated with cadmium or nickel to improve their appearance and prevent tarnishing. Plating could protect the outside of steel nipples but would not prevent rusted threads. The threads of brass nipples are cut after plating. Subsequent weathering produces only a thin layer of tarnish on their threads that has no functional effect.

NIPPLE LENGTHS

Nipples are made in various lengths to suit different rim thicknesses. Many wooden rims, for instance, required 25 mm long nipples to reach through the rim. Nipples must be long enough so that they can be turned by a spoke wrench. Regardless of its length, a nipple usually has no more than 20 threads at its head end and a smooth bore for the remainder of its length.

HEX HEAD NIPPLES

Some automatic wheel truing machines require spoke nipples that have hexagonal heads instead of the more common rounded heads with a screw slot. In these machines the heads of all nipples are engaged simultaneously by socket wrenches and are tightened until tension and alignment, measured by sensors, are within a specified tolerance. These spoke nipples also have flat flanks so that a standard spoke wrench can be used for subsequent manual truing.

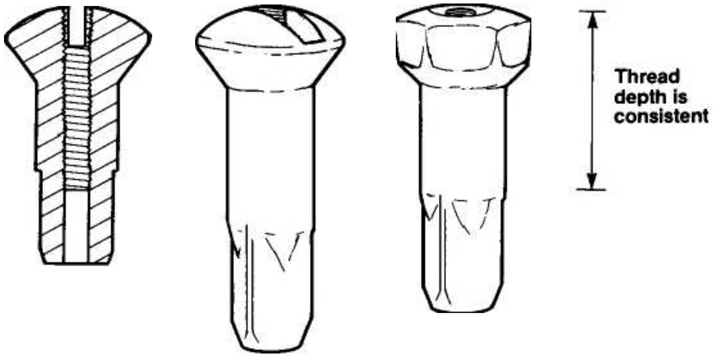

Figure 23. Nipple threads and shapes

RIMS

Rims may appear to serve mainly as a mount for the tire and a disk for braking. However, they also have the important structural roles of supporting the combined tension of the spokes and distributing wheel loads. They must be elastic enough to absorb shock loads, yet stiff enough to distribute loads over several spokes; and they must be strong radially, laterally, and in twist. As part of the braking system, they must convert kinetic energy to heat, absorb and dissipate this heat, and resist wear from rubbing brake pads.

RIM DESIGN

Rims are made in various shapes, from simple U-shaped sections to closed, rectangular-box sections. For narrow clincher rims, a cross section with more strength than a simple channel is achieved by adding a hollow section under the bed of the rim. This greatly improves strength with little additional weight. Rim strength is needed to distribute lateral and radial loads among the spokes.

Extruded aluminum rims provide the best combination of light weight, high strength, good ductility, corrosion resistance, and low cost. Ductility is a measure of how well a rim can bend in a crash without breaking. Aluminum alloy makes a more ductile rim than most other materials except steel. However, steel rims are heavy and are used primarily in inexpensive bicycles to reduce cost.

The ideal rim cross section is a rectangular tube, the structural form that has the greatest bending and torsional strength. A tire cannot be mounted on this ideal shape, but tubular tire rims with a U-shaped rectangular cross section approach this ideal. Clincher rims cannot come as close to this ideal shape because they must be open to accept the tire bead. However, well-designed clincher rims are nearly as good as rims for tubulars. Aluminum rim profiles are extruded like toothpaste through a forming die into straight rods that are rolled into a multiturn helix and then cut into hoops.

AERODYNAMIC RIMS

Streamlined rims have deep, rounded "V" shapes. Most of these rims are heavier and more rigid than their conventional counterparts. Often their braking surfaces are not perpendicular to the brake pad motion, and they usually have no steel inserts for spoke nipples because their deep cross section makes them adequately strong. However, nipples can easily gall rims without steel inserts, and bind during tightening and retruing. Although `aero' rims may be structurally strong, their minimal aerodynamic advantage often comes at the expense of greater weight, greater side wind sensitivity, and higher cost.

RIM SPOKE HOLES

The walls of lightweight aluminum rims are too thin to support concentrated forces from spoke nipples directly. Steel eyelets are crimped into the spoke holes of aluminum rims to reinforce them and to prevent the nipples from galling the rim when they are tightened. Good hollow cross section rims have steel sockets, held in place by crimped eyelets that distribute spoke loads to both the inner and outer bed of the rim. This method of spoke support permits thinner walls and lighter rims. Rims without sockets to distribute loads to both walls often crack around their spoke holes with use.

Steel washers can be used instead of sockets, but these are uncommon because even thick ones are relatively low in bending strength compared to a deep socket. Therefore, washers must be nearly as heavy as sockets to carry the same load. Since only one wall of the rim supports the washers, this wall must be thick to give the same strength as a thin wall of a socketed rim. Rims that use washers are only lighter than rims with sockets when weighed without their washers.

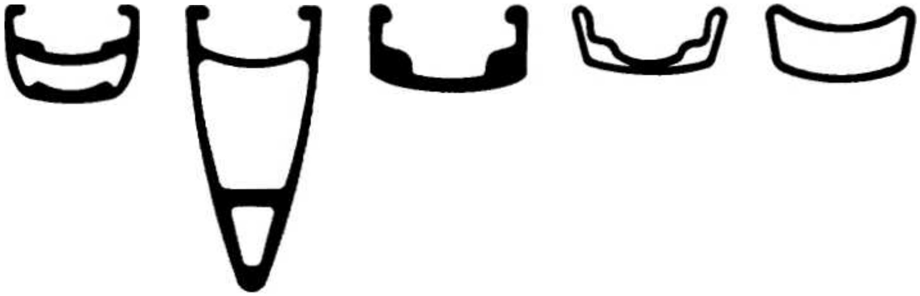

Figure 24. Rim cross sections

CLICKING RIM NOISES

Creaking or clicking noises sometimes come from steel sockets and eyelets that are rusty where they contact the nipple. These sounds show that, although they appear to be rigidly joined, all the parts of the wheel - hub, rim, spokes, and nipples - move with respect to each other in use. Unfortunately the noise cannot be eliminated once rust has set in. A drop of oil can give temporary relief, but only a new rim can solve the problem. Many of the more expensive rims use stainless steel sockets and eyelets to eliminate clicking noises from rust.

RIM JOINT

Rims are formed from straight material that is rolled into a hoop and joined. Many solid-section rims have welded joints, as do some hollow aluminum rims. For hollow rims, however, welding is not only difficult and expensive, but also unnecessary because the joint as well as the rest of the rim of a properly tensioned wheel is always under compression. Most hollow rims are joined with a close-fitting plug. Welding generally produces poorer alignment than a plug joint, and it has no strength advantage because there is no tension at the joint, only compression. When unspoked, plug joined rims can be pulled apart by hand if the insert does not fit too tight.

Plug joints sometimes separate in a crash, but only *after* the wheel has collapsed and has lost its spoke tension, and then only if the destructive force is near the joint. In fact, a wheel could be built from a rim of 3 6 segments not held together at all except during assembly. Such a wheel would perform normally except that if several adjacent spokes were cut, the rim would explode into 36 pieces, whereas a one-piece rim would develop a radial hump.

A concern has been expressed that, unless the two spokes adjacent to the joint cross on the way to the hub, the joint will separate in use. This concern ignores that the tension of all the spokes is supported by the rim as an arch in compression, a load of about a half ton for a 36-spoke wheel. To facilitate engaging a tire pump, wheels are usually spoked so that the spokes adjacent to the valve stem "pull apart" (are parallel). With this standard arrangement the spoke pair at the rim joint does not cross in radial wheels or those whose number of spokes is evenly divisible by eight (24, 32, 40, 48). That these spokes do not cross has no effect on the integrity of the rim joint.

RIM MATERIAL

Rims have been made of wood, steel, aluminum and nonmetallic composite materials. Aluminum is currently the best material for the shape and function of the rim. Aluminum has good thermal conductivity and excellent strength and ductility. The wall thickness of steel required to withstand concentrated loads at the spoke holes makes steel rims considerably heavier than aluminum rims. A steel rim of the same bending strength and weight as aluminum would have such thin walls that it could not support the forces at the spoke nipples.

The light weight of aluminum permits thick walls to support the spokes and absorb road shocks without denting. Its toughness enables aluminum to bend in a crash without breaking and exposing dangerous edges. Also, brakes work better on wet aluminum rims than on wet steel ones. Although these features make aluminum an excellent material for rims, steel will remain popular for inexpensive wheels due to its lower cost.

Wooden rims are strong and light, and are ideal for gluing tubular tires. Since wood is a good insulator, heat produced by braking will not soften tubular tire glue and cause tire creep. However, the disadvantages of wood outweigh these positive features. Wood is brittle and will not dent or fail partially. Wooden rim failures usually result in wheel collapse and dangerous splinters. Moisture causes wooden rims to distort and lose spoke tension and makes repeated truing necessary. Low thermal conductivity keeps wooden rims from absorbing braking heat and causes brake pads to burn away rapidly. In addition, wooden rims require greater braking force than metal rims because high temperatures soften the brake pads and reduce their coefficient of friction.

WOOD-FILLED RIMS FOR TUBULAR TIRES

Wood-filled rims have followed wooden rims into history, and the tubular tires that were mounted on them are likely to disappear next. Instead of sockets or washers, these rims use wooden filler pieces inside the hollow aluminum alloy rims. These pieces distribute the load to both surfaces of the rim as steel sockets do and require much smaller holes in the rim. Because the holes need be only large enough to accept nipple shafts, less material is lost from the rim. Because little material is lost, these rims can have thinner walls with the same strength as heavier rims. Although wood-filled rims are extremely light, they have the disadvantage of losing tension when the wood compresses under spoke nipple pressure aggravated by the effects of moisture. Loss of tension causes the wheel to lose both alignment and strength.

Wood-filled rims present other problems. The nipples cannot swivel in the rim to accommodate the different spoke angles produced by different spoke patterns. Therefore, spokes may bend excessively at the nipple. The holes must be drilled in the rim at angles to match a specific spoke pattern. Wood rims and wood-filled rims require long nipples. They must reach from the bed of the tire through the rim to expose flanks that can be engaged by a spoke wrench. Long nipples make wheel truing difficult because they often bind while being turned, and they weigh more then standard nipples.

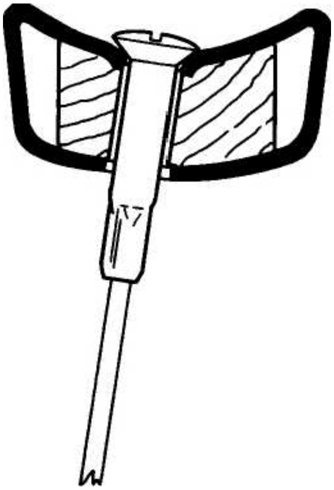

Figure 25. Wood filled rim

ANODIZED ALUMINUM RIMS

Aluminum naturally and rapidly forms a self-sealing oxide that protects its silvery surface. This characteristic does not protect it against the opaque blotches caused by more aggressive chemicals such as the salts and acids sometimes found on wet city streets. However, by anodizing, an artificial oxide layer can be developed sufficiently thick to protect aluminum even against harsh environments.

Anodizing is an electrolytic process that oxidizes aluminum in an acid bath. In thin layers the oxide is transparent, but with increasing thickness it becomes grey or brown depending on the alloying metals in the aluminum. The oxide is a porous, ceramic, hard and brittle coating up to about 0.03 mm thick. It rises out of the metal as much as it grows into the surface and is approximately half as dense as aluminum. Dyes in a wide range of colors can be added to anodized surfaces to mask the dull oxide.

Hard anodizing is a similar process performed in a chilled bath with additives to control porosity and oxide growth. It has a thickness of up to about 0.15 mm. Hard anodizing can also be dyed, but its natural olive green color best lends itself to dark colors.

Hard anodized rims have some major disadvantages. Although hard anodizing prevents corrosion and makes coloring possible, it is extremely hard and a thermal insulator. The hardness and insulation reduce brake efficiency because brake pads become hotter than they would against bare aluminum. Anodized rims are also weaker because the hard oxide is brittle. Surface cracks in the brittle surface that occur from high stress at spoke holes can propagate into the metal and cause spoke break outs. Such failures are relatively common in hard anodized rims. The reduction in fatigue life for anodized aluminum is documented in scientific publications by the aircraft industry among others.

Some aluminum rims are treated with chromate conversion. This electrolytic process converts the surface of the aluminum to aluminum chromate, giving a bright silvery finish that improves corrosion resistance. Aluminum chromate is neither an insulator, nor is it brittle like anodizing. It can be produced clear and in various shades of yellow.

CERAMIC COATED RIMS

Rims with a thick ceramic coating on braking surfaces have been made to improve wet performance. These rims have something in common with rain tires for racing cars. They improve wet performance but are poorer than standard ones when dry. The ceramic is rough and, because it is an insulator, becomes warm and subsequently dries quickly during braking. The hard coating also retards rapid rim wear that commonly occurs in off-road racing in wet conditions. The ceramic coating has no advantage in dry conditions and causes brake pads to overheat reducing brake effectiveness.

BRAKING CHARACTERISTICS

Braking performance is governed by the rim's thermal capacity and conductivity, its surface structure, and its ability to hold a film of water. These characteristics vary with materials. With a suitable brake pad, dry steel rims have excellent braking performance, but they perform poorly when wet. Although wood rims are mediocre when dry, at least they do not become much worse when wet. Aluminum is nearly as good as steel when dry and better than wood when wet.

Wet performance is affected primarily by surface roughness. Because hard materials polish more smoothly than softer ones, steel is smoother than aluminum. For this reason, smooth steel rims can `float' brake pads on thinner residual water films than aluminum rims can. Aluminum rims have greater microscopic roughness than steel. This roughness penetrates water films better than the smoother surface of steel. The thinner film is also harder for the brake pad to displace because water molecules close to the metal surface are more tightly attached to it. Hard, smooth anodizing degrades the wet braking performance of aluminum rims because, like steel, it supports thinner water films.

BRAKE HEATING

On long descents braking can make metal rims hot enough to boil water. Heat generated in the brake pad must be transferred to the rim to be dissipated to the air. When a soft material rubs against a harder one, heat is generated in the softer material. Heat from rubbing is generated by stretching and breaking intermolecular bonds. The softer material generates more heat because it deforms more under the rubbing action.

Because friction materials used for brake pads are insulators, brake pads remain cool to the touch during braking except on their contact surfaces where momentum of rider and bicycle is converted to heat by friction. This means that heat generated in the brake pad must be transferred to the rim where it can be absorbed and dissipated. For good braking, a rim must have good thermal conductivity, good heat capacity, and a large surface for cooling. Use of insulating materials for rims , such as wood, ceramic, or hard anodizing degrades braking performance.

HUBS

The hub may appear to be the most important part of the wheel because it is centrally located and all other wheel components rotate around it. In fact the hub acts only as an anchor for the spokes and is a fairly static part of the structure. Although bearings, axles and freewheels involve many clever design features, the structural parts of the hub that affect the wheel are the flanges. Although flanges appear simple, their design can have important effects on hub function.

HUB DESIGN

The combination of holes and necessary supporting material between them prescribes a minimum diameter for a hub flange. On the other hand, if the hub is to be as light as possible, its flanges should be no larger than necessary. For an aluminum hub the space between spokes should be about half again as wide as the spoke hole diameter. Because aluminum hubs have less than one-fourth the strength of the spoke material and about twice its thickness, this spacing is about the minimum necessary for a reasonable safety margin against the flange cracking.

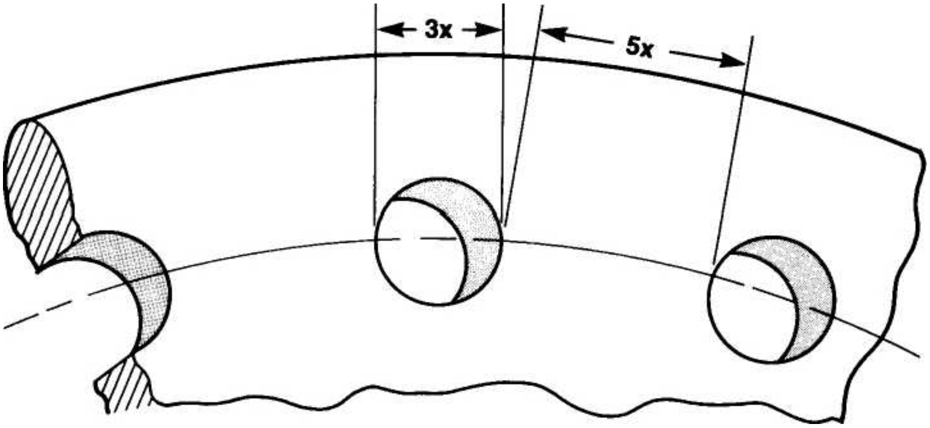

Figure 26. Hole spacing in flange

Flanges must be strong enough to support spoke loads, yet be softer than the spokes. Although steel is stronger than aluminum, it does not support spokes as well because it is too hard. Aluminum alloy has adequate strength, is lighter than steel, and is soft enough to allow the flange to yield until there is full contact between spoke and flange. When spokes are properly tensioned the aluminum flange material on which they bear is usually under enough stress to conform to the spokes.

To give better spoke support and to allow easier spoke insertion, the edges of spoke holes are usually beveled. Some aluminum alloy hubs are made with trumpet-shaped holes to match the curvature of the spoke elbow. However, a plain hole in which the spoke forms its own contour gives better support than a preformed radius that invariably does not match the spoke elbow. The contours formed by the spokes are visible on the flanges of an unradiused aluminum hub after a wheel is unspoked.

The distance between flanges gives a wheel its lateral strength. The width of a typical front hub is a good balance between radial and lateral strength. Rear hubs are a compromise, sacrificing some of the width required for lateral stren to the space required for a freewheel with a large gear selection. Multiple gears have crowded the flange spacing on rear wheels to a marginally acceptable width. Wheels with narrow flange spacing and many gears are less suited to rough roads than those with wider spacing and fewer gears.

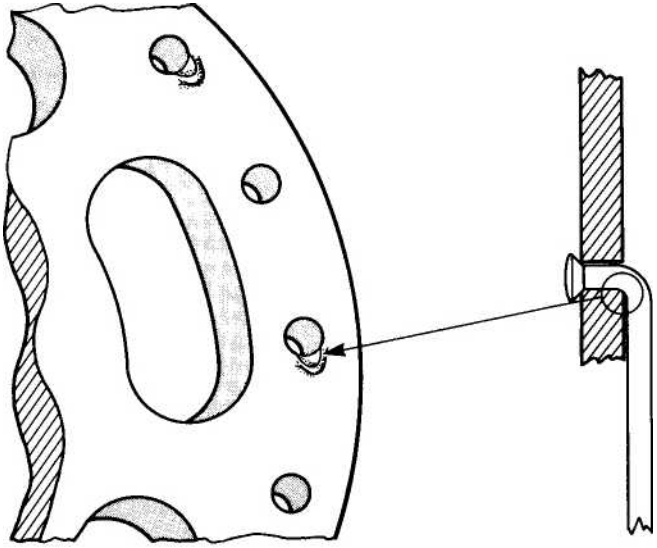

Figure 27. Spoke seating in the flange

SMALL- AND LARGE-FLANGE HUBS

Hubs are made with small- or large-flanges (low-flange and high-flange). The designations are arbitrary, but generally large-flange hubs are appreciably larger than needed for 3 6 spokes. Small-flange hubs for front wheels often have flanges about 40 mm in diameter, about as small as spoke spacing permits. However, some small-flange front hubs cannot be spoked tangentially with more than 32 spokes without spoke overlap. Flanges of rear hubs must be larger than those of front hubs because the spoke holes must lie outside the diameter of a standard freewheel or sprocket thread, or outside the body of a freehub mechanism. For convenience, hubs with the same size flanges, front and rear, have been made to use the same length spokes. In this arrangement the front hub is as large as the rear hub rather than as small as possible.

The main functional difference among hubs with different flange diameters is their torque stiffness (see Equation 2 in Part III). It is important to note that in most wheels torque loads are already adequately supported by small-flange hubs, so large-flange hubs provide no functional advantage and have the disadvantage of added weight.

Aggressively ridden tandem bicycles are an exception. With 36 spokes or fewer, tandem wheels require large-flange hubs to withstand the torque of two riders. And to support the additional weight, durable tandem wheels require at least 48 spokes that can only be accommodated by larger flanges.

Large-flange hubs are also used on track-racing bicycles, and it is sometimes claimed that the great torque of sprinting requires them. In fact, the tradition of using large flanges probably originated from a need to replace spokes easily in the days before reliable spokes. Because the flanges of these hubs are larger than track sprockets, they allow spokes to be replaced without removing the sprocket, something that is generally not possible with road wheels.

FLANGE DIAMETER AND TORSIONAL STIFFNESS

Wheels with large-flange hubs, spoked tangentially, are about twice as stiff, torsionally, as small-flange hubs. Such small-flange hubs develop about 200 Newton-meters (Nm) torque per degree of hub windup. This means that the average rider, using a two-to-one chain ratio (42 tooth chainwheel and a 21 tooth freewheel sprocket) and 170 mm cranks, would have to press on the pedals with 2500 Newtons (N) to windup a small-flange hub one degree, or about 5200 N (more than half a ton) for a large-flange hub (see Equation 4 in Part III).

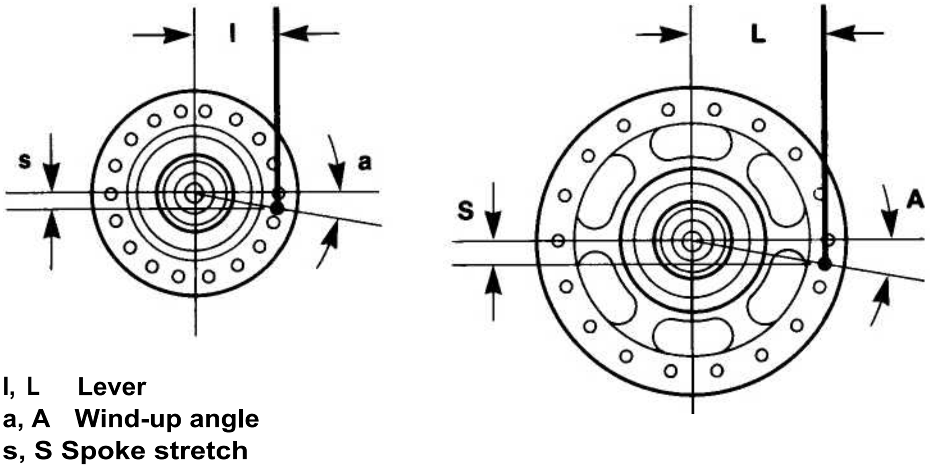

Figure 28. Torsional stiffness and flange size

It should be evident from this comparison that small-flange hubs provide adequate torsional strength and stiffness. Although there is no need for large-flange hubs for greater torsional stiffness, their reduction of torque-induced spoke loads might improve fatigue life slightly. However, with larger flanges the spoke angle at the rim becomes farther from perpendicular, causing spokes to bend at the nipple. This bend increases failures at the threads and probably cancels any gains from reduced torque loads. To avoid this problem, large-flange hubs are often spoked in a less than fully tangential pattern negating part of the claimed advantage of large flanges.

HIGH-LOW REAR HUBS

Hubs with a high (large) flange on the right and a low (small) flange on the left have been made in an attempt to counteract rim offset in multispeed rear wheels. This arrangement has no effect except with radial spoking. Offset, the principal problem in rear wheels, can be reduced only by moving the freewheel farther away from the wheel centerline, or by narrowing the flange spacing. Offset is undesirable because it causes large left-to-right differences in spoke tension and makes the wheel more likely to collapse from side loads from the right. Bringing the left flange closer to the center improves the balance of spoke tension, but only at the expense of reducing lateral strength on both sides of the wheel.

In a high-low hub the larger diameter of the right flange can help balance tension by about five percent, but only if the spokes are radial. With tangential spoking, no improvement is achieved by the high flange because its spokes have the same length and leave the hub from the same lateral position as the ones from the small flange. The large-flange, however, makes spoke insertion on the low side difficult. High-lows cannot reduce vertical loads, the principal cause of spoke failures. Torque loads have so little effect on fatigue that high-low hubs offer no improvement over conventional hubs.

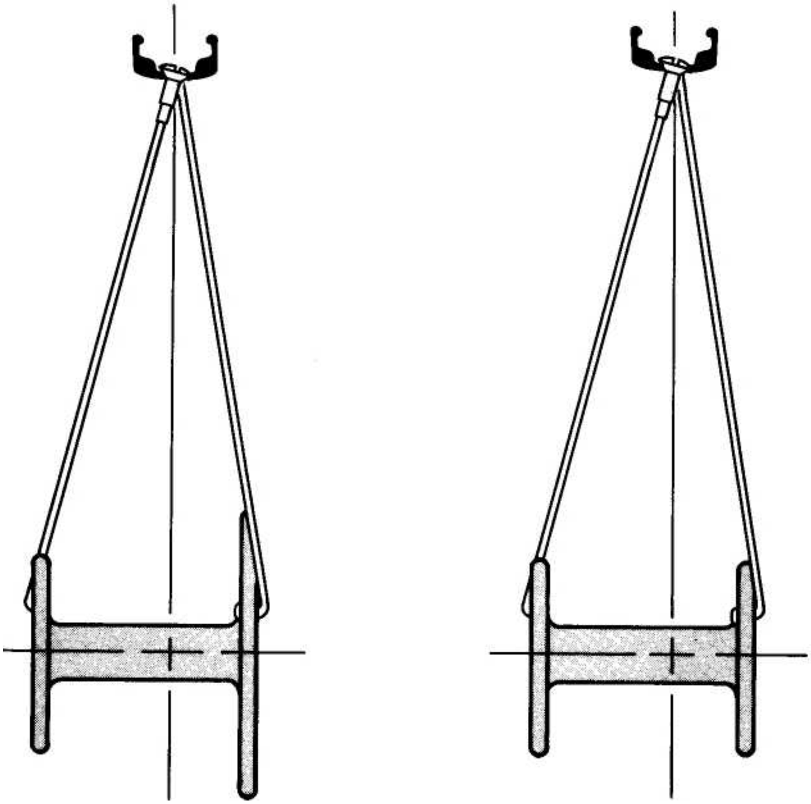

Figure 29. High-low flange versus low flange hub, both spoked tangentially

TORSIONAL STIFFNESS OF THE REAR HUB

Torque transmission is more than adequate in hubs used today. Therefore, the following discussion is of more theoretical than practical interest.

Some torque from the right side of the hub is transmitted through the hub shaft to the opposite flange (see Equation 5 in Part III). The torsional stiffness of this shaft determines how much torque will be transmitted. The shafts of most aluminum alloy rear hubs are relatively weak and have a torsional stiffness of about 30 Nm per degree of twist. This is considerably less than the torque stiffness of the crossed spokes, but it is enough to transmit thirteen percent of the torque in a tangentially spoked small-flange hub. In a large-flange hub only seven percent of the torque is transmitted through the shaft because, in comparison with the small-flange hub, the effective spoke stiffness is much greater. In a high-low-flange hub, with a right flange larger than the left flange, nearly all torque is transmitted by the spokes on the right side of the wheel.

Some hubs with large-diameter shafts have such a high torsional stiffness that torque is distributed almost equally to both sides of the wheel. This design feature makes small-flange hubs as stiff torsionally as conventional large-flange hubs. Track-racing hubs, that accommodate only a single sprocket rather than multiple sprockets, have their flanges so widely spaced that their shafts transmit less than five percent of the driving torque to the left side of the wheel (see Equation 6 in Part III).

WHEEL DESIGN

Wheel design consists mainly of selecting the best components for a specific use. There is not much to decide in the way of spoke patterns, unless there are limited spoke lengths available. It should be no surprise that tangential spoking is the best for all wheels almost without exception. It is only a matter of convenience how close the spokes are to fully tangential. For instance, with 3 6-spokes cross-three is nearly tangential, and cross-four is fully tangential.

Cyclists who choose to build wheels often want something more than ordinary, but just building conventionally is not a trivial task if a durable wheel is the goal. It may be disappointing to discover that "it's all been done before" and that conventional wheels are a result of a hundred years of refinement. The true contribution for the new wheel builder is to build conventional wheels exceptionally well.

NUMBER OF SPOKES

The number of spokes affects the strength and durability of the wheel. The 36-spoke wheel has been the standard in racing and touring because it is a good balance between durability and light weight. With improved spoke durability, and in an effort to reduce wind drag, 32- and 28-spoke wheels have now become more common. Although an extralight wheel with few spokes may survive on the road for a while, experienced riders usually choose 36 spoke wheels for durability. Besides, disk and composite wheels with 3 to 5 spokes have replaced low-drag spoked wheels in most events where wind drag is the primary concern.

Spokes at the top of the wheel move through the air twice as fast as the bicycle, so their drag is significant. The more spokes the more drag. Reducing wind drag is the primary reason for using fewer spokes. For events such as the kilometer time trial, wheels with 24 spokes were often used until disk wheels were approved. Reducing the number of spokes to save weight is not effective. Lighter rims, thin, swaged spokes, and aluminum alloy nipples do a better job.

SPOKE PATTERNS

A spoke pattern is defined by the number of times each spoke crosses adjacent spokes on its way from the hub to the rim. Cross-zero, for instance, is a radial pattern. Radial spokes project straight out on a line from the axle to the rim. Crossed spokes lie more or less tangent to the flange and cross over one or more adjacent spokes between the hub and rim. They project from the flanges both clockwise and counterclockwise so that they cross one another. There are also mixed patterns called "crow's-foot" that have both radial and crossed spokes.

RADIAL SPOKING

Radial spokes carry loads just as well as crossed spokes, but they cannot transmit torque. They transmit torque only after the hub rotates ahead of the rim, making the spokes no longer truly radial. This rotation produces a small tangential offset, or lever, on which spoke tension can act to produce torque. This lever is the distance between the axis of the hub and the extended axis of the no-longer-radial spokes. The driving torque is the product of this small offset and the tension of all the spokes.

In a radial rear wheel the windup that occurs while riding is small (less than two degrees). However, this motion increases spoke fatigue, and spoke rotation in the flange causes wear. As radial spokes wind up under torque, they become appreciably tighter causing high rim stress and, in some instances, flange or rim failure. Looser spoking would reduce windup induced tension, but it would also reduce wheel strength.

Even though they transmit no torque, front wheels should not be spoked radially because high radial stress can cause fatigue failure of their flanges. The spoke holes of aluminum alloy hubs can break out causing wheel collapse. Flange fatigue takes time, so these failures do not occur immediately. Some lightweight hubs carry specific warnings against radial spoking.

Radial spoking has no aerodynamic advantage over other patterns because near the rim, where the spokes produce the greatest drag, they occupy exactly the same positions, regardless of pattern. At the rim, spokes arrive alternately from the left and right sides and do not draft one another. Without resorting to disk wheels or flat spokes, the best way to reduce drag is to use fewer spokes. Flat spokes have their own problems that are described elsewhere.

CROSSED SPOKING

Crossed, tangential spoking is used to transmit torque. The term "tangential" refers to the way the spokes project from the flanges. If a spoke is fully tangent, a line from the hub axis to the spoke head will form a right angle with the spoke. The hub turns the spokes by pulling on them with a lever equal to the effective radius of the flange. The closer the spokes are to fully tangent, the greater the effective flange radius becomes. This radius is the distance between the spoke axis and the hub axis. It is the lever that enables the cross-spoked wheel to transmit torque with lower stress than a radially-spoked wheel. With spokes nearly tangent to the flanges, adjacent spokes pull in opposite directions and produce little radial stress on the flange. This lower stress, in contrast to the much higher stress of radial spoking, reduces the possibility of flange failure.

NUMBER OF SPOKE CROSSINGS

The number of spoke crossings in a wheel is defined as the number of spokes from the same flange that each spoke crosses between the hub and rim. The maximum number of crossings is produced when the spokes lie most nearly tangent to the flange. This number can be determined by dividing the number of spokes by nine. For example, in a 32-spoke wheel the maximum number is three. If this number is exceeded, the effective flange diameter will be reduced, and spokes will overlap the heads of others causing gridlock.

If the flange diameter is unusually large or small, the number of spoke crossings must be reduced to avoid interference between spokes at the flanges. When the flange diameter is greater than twice the spoke spacing at the rim, such as in a hub with an internal brake, the "divide by nine" rule no longer works because spokes will reach beyond the tangent point on the flange and will interfere with adjacent spokes. Spokes that interfere with adjacent spoke heads are difficult to replace, and they receive an additional bend that increases stress.

INTERLACED SPOKES

Spokes in a crossed pattern are usually interlaced at their last crossing before reaching the rim. Spokes coming from between the flanges are laid over those from outside the flanges. Interlaced spokes take up each other's slack during severe radial loading and reduce the chance of spokes becoming loose. If spokes become loose, their nipples can unscrew. Radial spokes cannot be interlaced and therefore, lose alignment from road shock more easily. Interlacing also gives more clearance between the spokes and the derailleur on rear wheels.

IDENTICAL AND MIRROR IMAGE SPOKING

Wheels with crossed-spoke patterns can be built with the left and right sides identical to one another or as mirror image opposites. This design feature only affects rear wheels where torque is transmitted. Even with rear wheels the difference between mirror image and identical spoking is insignificant and should be viewed as an academic subject of little practical value.

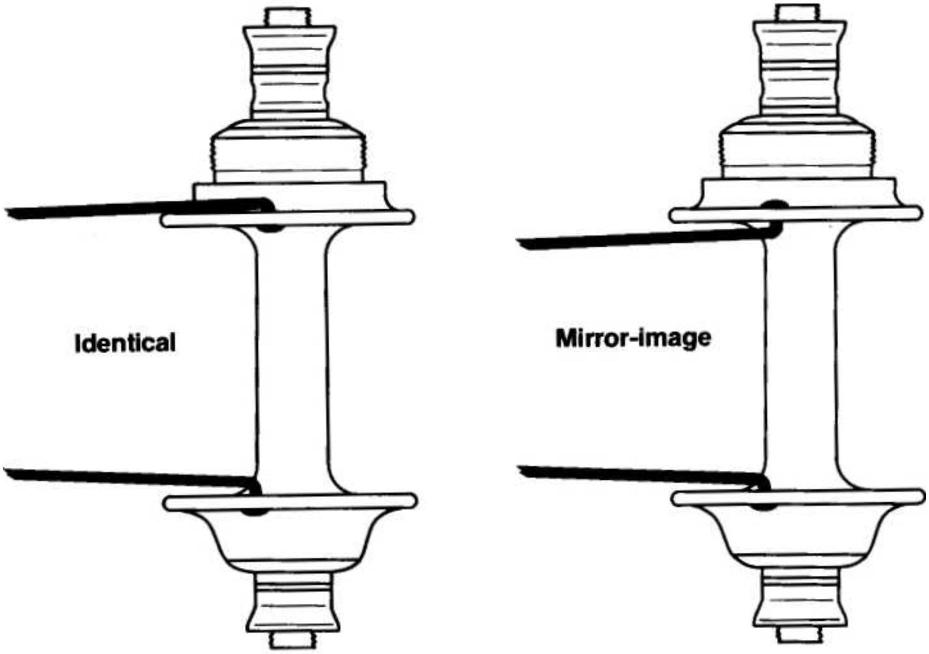

Figure 30. Identical and mirror image spoking

In a wheel with identical spoking, both flanges have their pulling spokes on the left (or right) side rather than between them (or outside of them). During torque transmission pulling and pushing spokes of each flange exert a lateral force toward the pulling side. In a wheel with mirror image spoking, all spokes coming from between the flanges are the same kind, either pulling or pushing. During torque transmission, the pulling and pushing spokes of each flange exert a lateral force in opposite directions and, in theory, cancel each other. The spokes on the left oppose the lateral force from spokes on the right rather than reinforcing it as with identical spoking. These lateral forces would be perfectly balanced if each flange transmitted half the torque. But they don't.

Tension changes resulting from pedaling cause an interlaced spoke crossing to move toward the side of the pulling spoke. At the crossing point, the tighter (pulling) spoke straightens while the other spoke bends more. This moves the crossing point inward or outward depending on the spoking. If the derailleur is near the spokes, and the pulling spoke comes from the outside of the flange, clearance will be reduced when torque is transmitted. With pulling spokes coming from the inside of the flange, derailleur clearance increases with torque. Keep in mind that bending of the rear axle from the pull of the chain can also reduce clearance between spokes and derailleur. In fact, clearance effects are so small that they may not be sufficient reason to insist that all rear wheels be spoked mirror image with pulling spokes coming from between the flanges.

COMBINED SPOKING PATTERNS

Wheels can be laced in patterns that combine radial and crossed spokes. These patterns are interesting in appearance but have no measurable advantages over standard crossed-spoke patterns. For example, the "crow's-foot" pattern has two-thirds crossed spokes and one-third radial. It is formed by a one- or two-crossed pattern with a radial spoke between each pair of opposing spokes. This pattern can be laced only on wheels with spokes in multiples of six (24, 36, 48).

Lacing the left and right sides differently on hubs with the same size flanges has no advantage. However, such left-right combinations are often used on hub brakes with two different flange diameters. For these hubs it is best to use fewer crossings on the larger flange so that the spokes do not approach the rim at too great an angle.

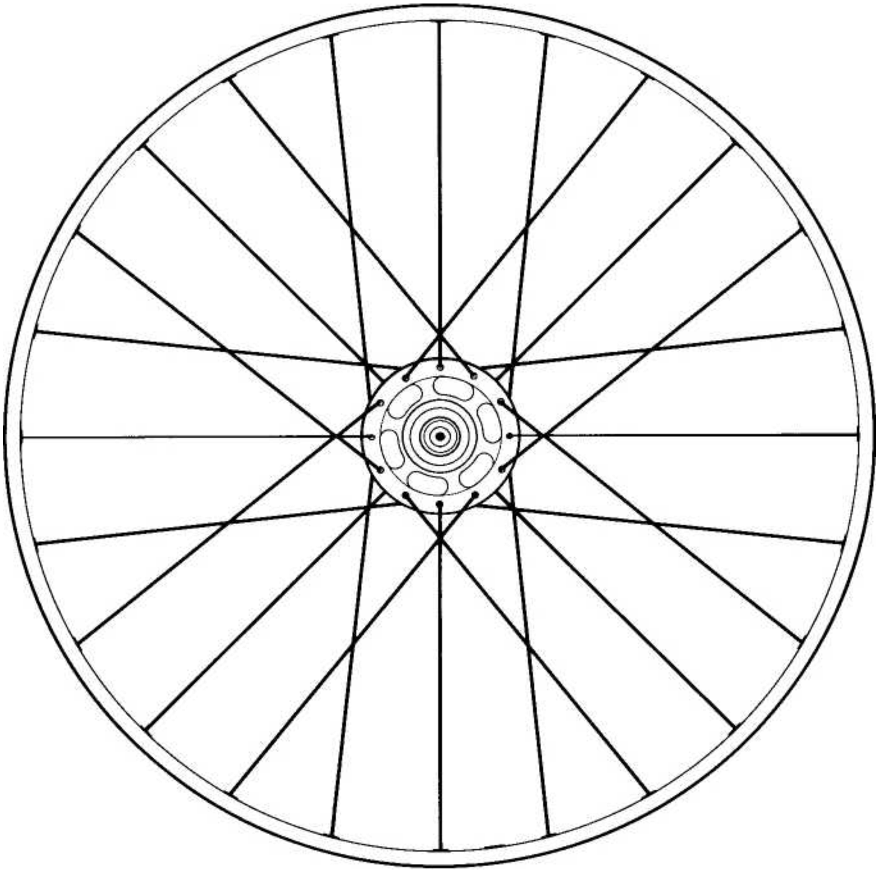

Figure 31. 24 spoke crow's foot pattern

SPOKE TENSION

With tensioned wires as spokes, the wheel can support loads only to the point where its spokes become loose. At this point the wheel will collapse. Therefore, for greatest strength, spokes must be as tight as the rim permits. Structurally the rim supports spoke tension as an arch that is compressed by the inward force of the spokes. The load limit for most rims is far less than what the spokes could deliver if they were tightened to their breaking point. So in a conventional wheel, it is the rim that limits wheel strength, not the spokes. A rim can be subjected to spoke tension near its elastic limit because, during use, almost no net tension increase occurs.

In practice, however, spokes should be slightly looser than the maximum the rim can sustain, because at maximum tension, failure of a single spoke can severely deform the rim. Because the principal load on the rim is compression from spoke tension, failure from too much tension typically causes column buckling of the kind that occurs when a thin pole is overloaded in compression. The rim bows out sideways and then takes on a saddle shape. Because spoke strength is not limiting, most wheels with lubricated spoke nipples that turn freely can be overtensioned easily to the point of rim failure.

Even though spokes are seldom tightened to more than one-third of their breaking tension, they occasionally fail during tensioning. Torque required to turn nipples increases with spoke tension, and if the nipples are not well lubricated, the combined stress of tension and twist can cause spoke failure. Combined torsion and tension has a greater effect than the sum of the individual stresses.

Although tension in individual spokes may change considerably in use, rim load caused by tension remains nearly constant because any lost inward force of tension is replaced by force from the external load. As a result, a wheel with spoke tension near the limit of rim strength can support large loads easily. However, a safety margin for exceptional loads should be maintained. The safe-tension limit is best determined experimentally by the stress-relieving procedure described later.

SOFT SPOKING

It has often been suggested that looser spoking will improve the cushioning of a wheel, for instance one used on rough roads. Because the elasticity of spokes arises from the material properties of steel and is not affected by more or less tension, no change in ride quality can be achieved by loose spoking. Spoking with less than optimal tension only forfeits strength and durability.

CORRECTING THE SPOKE LINE

In a cross-laced wheel, spokes bend where they exit the hub and where they enter the nipple. These bends, if not fully supported, will flex with every wheel rotation causing spoke fatigue and breakage. Bends should be supported at the hub by the flange and at the rim by the nipple. To avoid fatigue failures the unsupported spoke shaft should follow a straight line between the last points of contact with the hub and rim. After tensioning the lines of the spokes in a new wheel must be corrected to achieve this condition.

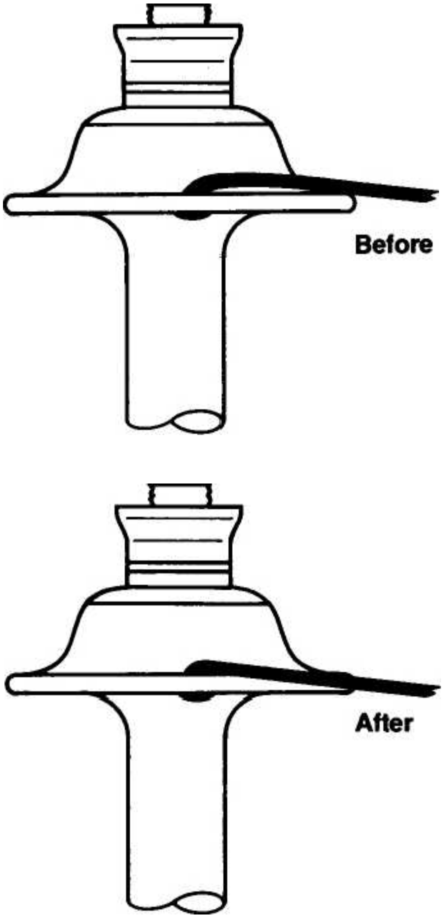

Figure 32. Spoke line at the hub

If a fine thread were substituted for the spoke, it would take this ideal line. It would lie flush against the supporting surfaces of the flange and the edge of the nipple, and would lie in a straight line between them. The spoke line can be improved by pressing outbound spokes against the flange near their elbows with the thumbs. Although nipples can usually swivel in the rim, they may not swivel sufficiently to match the spoke angle. A bow in a spoke at the nipple can be corrected by grasping pairs of crossing spokes near the rim and squeezing them together. These spoke adjustments must be performed with care to prevent overcorrection.

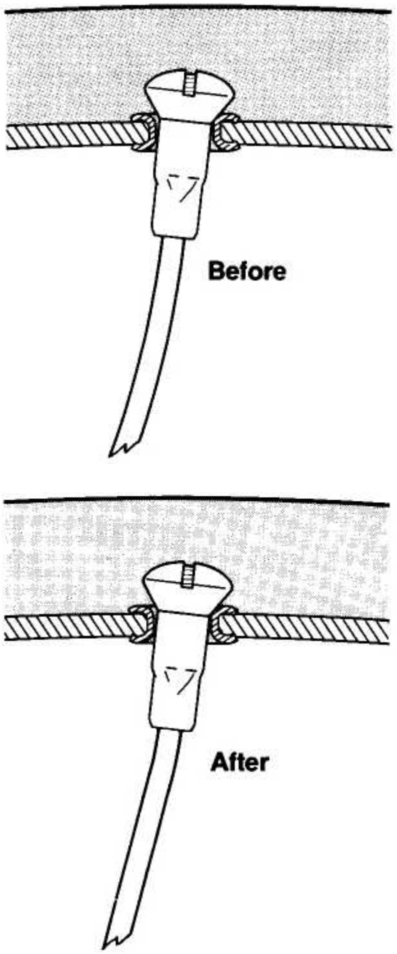

Figure 33. Spoke line at the rim

STRESS RELIEVING

Spokes are cold formed. After cold forming steel always springs back a certain amount. The spring-back is incomplete because part of the material went beyond its elastic limit and part did not. These disparate parts are fighting each other, and when spokes are tensioned, one or the other of these elements will be stressed additionally. This stress can be, and often is, at the yield stress and must be relieved when the wheel is completed.

After correcting the spoke line, and when the wheel is true and tensioned, its spokes may appear to be in perfect alignment. However, some of the spokes have a good line at the elbow and rim only because they are tensioned. Besides, spokes have residual stresses at their elbows, heads, and threads from their forming process. As the wheel was laced the spokes may have been bent to make them conform to the hub and nipples. Since they were brought to their yield stress to bend them into place, the addition of tension guarantees that they remain at the yield point. When stressed to near their yield point, spokes have a short fatigue life. These stresses must be relieved to make the wheel durable.

HOW STRESS RELIEVING WORKS

Stress relieving can be regarded as correcting the spoke line at a microscopic level. The process momentarily increases spoke tension (and stress) beyond the yield point, but only in the parts of the spoke that are near yield. At the high stress points the spoke will deform plastically and take a permanent set. When the stress relief force is removed these areas cannot spring back, having, in effect, lost their memory, and relax to a lower stress. The wheel may lose tension during stress relieving, but not because the spokes have stretched. Any length change occurring at the high stress points is microscopic. Loss of spoke tension comes from the spoke elbows seating into the flange.

Stress relieving also provides an accurate method for determining the maximum safe spoke tension for a wheel. A 50% increase in tension of four spokes realistically represents a momentary overload. If the wheel is too tight, it will warp into a saddle shape during stress relieving. A properly tensioned wheel should withstand a firm squeezing of two spoke pairs with only slight loss of alignment if any. To avoid rim damage, testing for wheel's tension limit should be undertaken carefully. The grasp should be increased gradually to full force while watching for sudden loss of alignment.

HOW TO RELIEVE STRESS

Spokes are best stress relieved by grasping each of the most nearly parallel spoke pairs at midspan on the left and right sides of the wheel and forcefully squeezing them together successively around the wheel. This process is sometimes accompanied by the sound of spokes untwisting in the nipples. No sound will occur if the residual twist in the spokes was removed, as it should have been while truing the wheel. Stress relieving is not intended to free twist in the spokes because twist should be eliminated during proper spoke tightening.

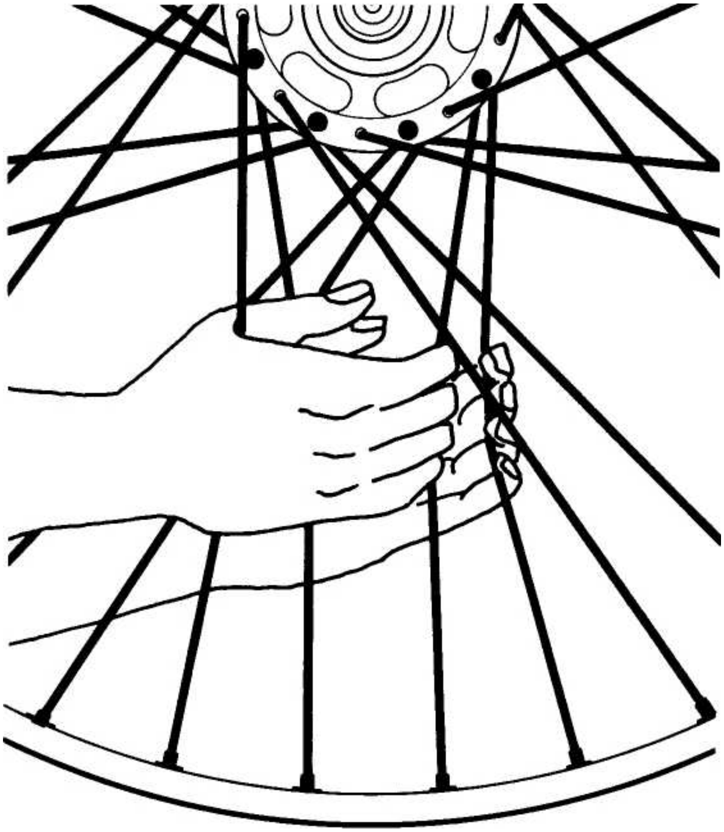

Figure 34. Stress-relieving

Other methods of stress relieving include placing the wheel on the floor and either walking on the spokes or pressing on the rim. The amount of overtensioning each spoke receives cannot be controlled with these methods. Some spokes may be missed entirely, and the one-sided load can damage the rim. Pressing on the rim is ineffective in stress relieving because the applied force is distributed over too many spokes. This method is popular because it produces reassuring clicks as it releases spoke twist, clicks that are perceived as beneficial.

TIED-AND-SOLDERED SPOKES

Spokes can be tied and soldered together with fine wire at the places where they are interlaced. This practice was used on high-wheeled bicycles after the introduction of cross-laced spoking to prevent broken spokes from lashing about and causing a crash. These spokes could be over thirty inches long. This practice has been kept beyond its time as its original purpose has vanished. Its perpetuation has been justified by claims that it increases wheel strength.

Measurements and computations both show that there is no change in lateral stiffness, torsional stiffness, or strength (in small- or large-flange wheels) between tied and untied spokes. Although crossed spokes fret and notch each other after prolonged use, restraining this motion does not cause any changes that can be measured. The only benefit of this tying and soldering is restraint of broken spokes. Otherwise the procedure has no value for road wheels and no value for track-racing wheels where it is still sometimes used.

Figure 35. Tying and soldering

PART II

BUILDING AND REPAIRING WHEELS

INTRODUCTION

The purpose of some procedures described here may not be obvious at first, although they are intended to simplify the building of true and reliable wheels. With patience and practice the method should become routine and its purpose self-evident. Building and repairing wheels, the necessary tools, and common problems are described using methods based on theory described in Part I. Therefore, questions that arise while building wheels may be answered by referring to appropriate sections in Part I.

Note: Illustrated wheels have large flange hubs for clarity and are not meant to imply that this is the preferred hub style.

PARTS AND TOOLS

A wheel is composed of a hub, a rim, spokes and nipples, components that should be selected to meet the requirements based on concepts presented in Part I. The only tool essential for wheel building is a spoke wrench. The bicycle can serve as a good and adequate truing stand. Brake pads, or a clothespin attached to the brake caliper, can be used as a reference from which to observe wheel alignment.

When purchasing components, the following should be considered:

1. RIM: number of spokes, aluminum or steel, tire type (conventional or tubular), tire size, width, schrader or presta valve, and straight or hooked bead for clinchers
2. HUBS: flange size, number of spokes, aluminum or steel, quick release or plain axle, type of bearings, cassette hub or separate freewheel
3. SPOKES: length, swaged or straight, plated or stainless, 1.8 or 2.0 mm diameter
4. NIPPLES: Brass or aluminum, length, 1.8 or 2.0 mm thread size, wrench size.

Some of these choices are best resolved while comparing price and components at the bicycle shop. However, it is best to go there prepared with relevant questions. Before leaving the shop with the selected wheel components, the number of holes in the hub(s) and rim(s) should be counted, the nipples should fit the spoke threads, and all the spokes should be checked for correct type and length.

With more than a hundred combinations of length and size, that are indistinguishable unless measured, spokes can easily become mixed at a bicycle shop. For this reason unpackaged spokes should be accepted with caution. To avoid mix-ups, buy spokes in factory sealed packages, even if these have a few more spokes than needed.

The idea that better cycling performance can be achieved through more expensive components is mostly an illusion. Durable and reliable parts generally cost more than average ones, and the extra expense is usually justified. On the other hand, advice that certain rims, spokes, or hubs will improve cycling performance should be taken with skepticism. Money is better spent for hubs with reliable bearings and quick releases, durable spokes, and rims that are known to hold tires well and that do not develop fatigue cracks. Odd-shaped rims with exotic coatings, nonround spokes, and aluminum nipples should be avoided, unless you are willing to spend more and accept the drawbacks for the marginal advantages of such designs.

HOW TO SELECT COMPONENTS

The following summarizes previously described criteria for selecting components. If these items have been selected then skip to Getting Ready.

RIMS

- Rims should fit the type and size of tires available in the region of intended cycling. Some special tires are not universally distributed.
- Aluminum rims with a hollow cross section and steel spoke sockets and eyelets or washers are preferred because steel sockets have better strength to support spoke nipples and prevent galling during truing.
- Both rim and hub must have the same number of spoke holes.

HUBS

- Aluminum hubs are preferred over steel because aluminum is strong, yet soft enough for spoke elbows to seat into the flanges. It is also lighter and does not corrode as easily as steel.
- If steel hubs are used, they should have flanges thick enough to fully support spoke elbows. Most steel hubs have thin flanges that allow the unsupported spoke elbows to flex leading to early fatigue failures. This effect can be reduced by modifying spoke elbows as described under *Correcting the Spoke Line.*

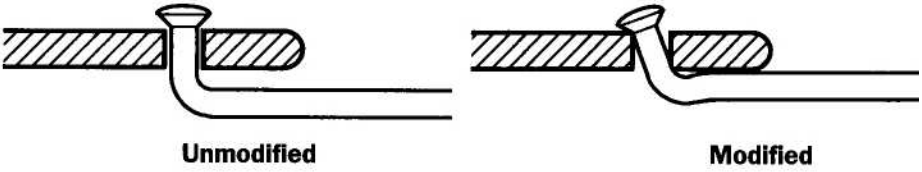

Figure 36. Adjusting spokes to a thin flange

SPOKES

- Decide on stainless steel, chromium- or zinc-plated spokes.
- Decide between straight gauge or swaged spokes.
- Select 1.8 or 2.0 mm diameter spokes.
- Choose the proper length.

Stainless steel spokes are more durable and reliable than plated spokes, but their main advantage is that they remain clean and bright and permit retruing after long exposure to weather. Plated spokes often rust solid into the spoke nipples. They eventually break at the nipple, either in use or when attempting to turn the nipple. On the other hand, good stainless steel spokes can and should be reused when a rim wears out or is damaged.

Rim alignment responds more directly to adjustments to straight gauge spokes than to swaged ones because they twist less during adjustment and because they are less elastic. Consequently straight gauge spokes allow wheels to be built and trued more quickly, but swaged spokes are easier to tension uniformly. Swaged spokes twist more than straight ones when the spoke nipple is turned, and the thinner the spoke the more twist. This is especially true for extra slender spokes or aerodynamic flattened ones. A spoke's torsional stiffness is related to the fourth power of the largest inscribed circle of its cross section.

The greater elasticity of swaged spokes distributes load among more spokes and reduces local stress on the rim roughly in proportion to the cross sectional area of the spoke. Comparing a 2 mm spoke to a 1.6 mm spoke, the 1.6 mm spoke is about 1.5 times as elastic and can spread forces over more rim sockets than a stiffer straight spoke. The likelihood that a spoke will loosen under shock loads is also reduced when swaged spokes are used, but since they twist more when the nipple is turned and produce more elastic interaction among spokes, truing is more time consuming. Although a wheel with swaged spokes may take longer to true, it will be a more durable than one with straight spokes.

In addition to 1.8 and 2.0 mm diameter, spokes swaged to 1.5 mm and flat ones are available. In a standard 700c 36-spoke wheel (or 32-spoke MTB wheel), all major brand spokes (including ones swaged to 1.5 mm or less) are strong enough, but 1.8 mm diameter spokes are preferred. They are easily tightened to optimum tension and will not twist off as flattened or extra slender spokes sometimes do. The choice is mainly a matter of ability to tighten spokes to make full use of rim strength rather than a load limitation. There is no perceptible difference in ride comfort among different types of spokes. Although the thinnest spokes are twice as elastic as the thickest, the tire cushion is in the order of 100 times more elastic and completely masks the difference.

If a reference table of lengths is not available, the correct spoke length for a rim and hub combination can be calculated (see Equation 1 in Part III). Spoke length is measured from inside the elbow to the opposite end. The spokes should be within a millimeter of the correct length to ensure that they will not protrude from the nipples and puncture the tube or have insufficient thread engagement.

A spoke length correction can be made for offset rear wheels so that spokes from both hub flanges will be flush with the top of the nipple. Spokes for the left side should be one millimeter longer, and for the right, one millimeter shorter than the value calculated. The length correction is only approximate, but for conventional multi-speed wheels it is reasonably accurate. When tightened, spokes elongate and rim diameters shrink, effectively lengthening the spokes as much as a millimeter (see Equations 3 and 7 in Part III).

NIPPLES

- Nipples from the same manufacturer as the spokes are preferred.
- If more than one length is available, use the shortest ones that still expose their wrench flats when inserted in the rim.
- Make sure that the thread is the same as the spokes. 2.0 nun diameter nipples fit on 1.8 mm spokes, but their threads will strip when tightened.
- Decide between brass and aluminum nipples. Brass has several advantages.
- Nipples have different wrench sizes. Although the most common is 2.8 mm, another common sizes is 3.0 mm.

Note that, regardless of length, spoke nipples generally have only about four millimeters of threads at the head end and a smooth bore for the remainder of their length.

SPOKE WRENCH

Spoke wrenches are made in many different designs. A good wrench will have hardened steel jaws, enough grip to afford good leverage, and will fit comfortably in the hand. It should fit the nipples closely. If its jaws are too wide, they will round the nipples. Some spoke wrenches are made for occasional repairs; others are for building wheels. The former are often found in repair kits, while the latter are usually sold separately in good bicycle shops.

Atwo jawed spoke wrench is preferable for ease of engagement. These are adequate to twist off most spokes if tightened sufficiently, however, most of the torque the wrench transmits is to overcome friction between nipple and rim, not tightening torque. This is why lubricating the nipple and rim interface is important.

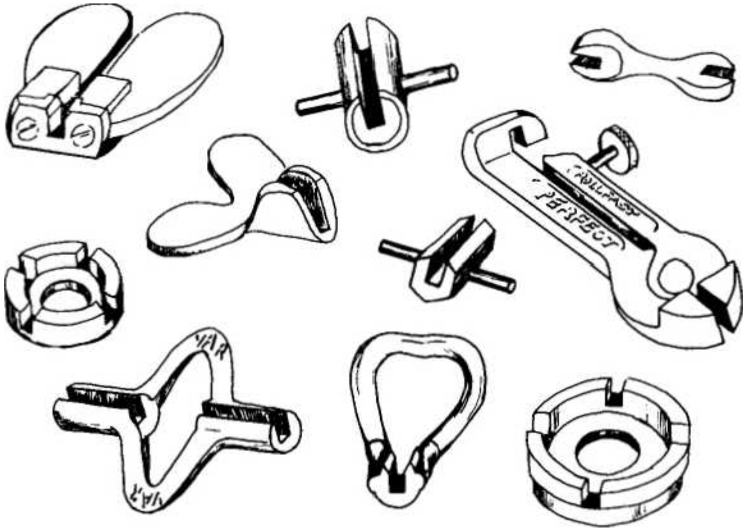

Figure 37. Spoke wrenches

GETTING READY

- Check the number of holes in the rim and hub again, as well as the number of spokes and nipples.
- All spokes of each set - front, left rear, and right rear spokes - must be the same length within a millimeter. With the spokes of each type in a bundle, all heads up, tap the threaded ends against a flat surface until they are flush. Weed out odd length spokes.
- While holding the spokes in a bunch, apply a few drops of motor oil or medium-weight machine oil to the threads. After wiping off excess oil, the spokes should be placed in a handy location.
- Using a cotton swab soaked in oil, lubricate each spoke socket in the rim. Place the nipples in a bowl close at hand.
- Choose a comfortable seat in a well-lighted area.

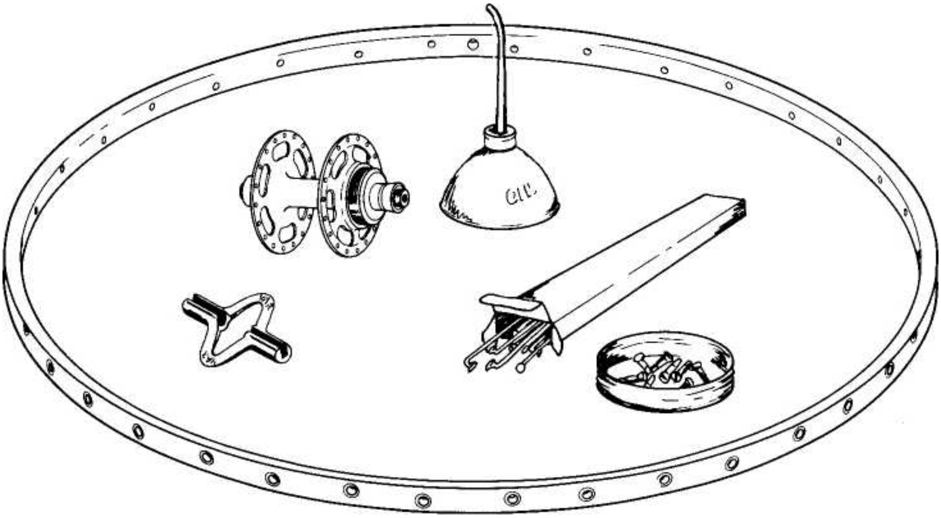

Figure 38. Getting ready to build a wheel

INSERTING THE SPOKES

The following assembly method will place the valve stem between two nearly parallel spokes to improve pump access for tire inflation. Coincidentally, the rim joint will also lie between a parallel spoke pair if the number of spokes in the wheel is divisible by eight (24, 32, 40, 48). Location of the joint has no effect on its integrity in use. However, if placement is ignored, the stem could fall between two crossing spokes or under spokes sloped forward or backward.

Although each flange has an even number of holes, the holes in one flange are offset so that they lie half way between the holes in the opposite flange. Looking straight across the hub this offset should be apparent. Half the holes of each flange will receive spokes from the inside (spoke heads between the flanges), called outbound spokes, and half from outside the flanges, called inbound spokes. Insert the inbound spokes first.

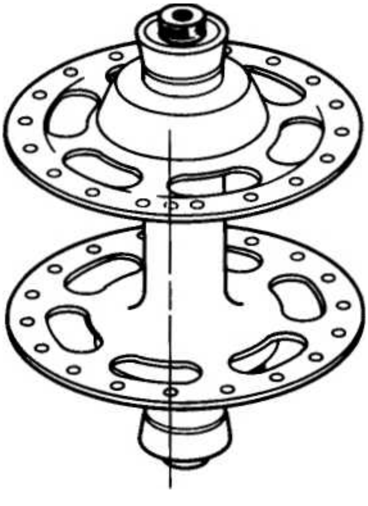

Figure 39. Spoke hole offset in the hub

THE FIRST SPOKE

For a front wheel, skip to *All Hubs* (page 86). Because a rear wheel transmits torque, the spokes should have the preferred orientation described in Part I. To achieve this orientation, place the rim on your lap with the valve stem hole at the far side. Hold the hub with its right side (the sprocket side) down if the spoke hole on the right of the stem hole is lower than the one on the left. Otherwise, hold it with the right side up. If the holes lie exactly along the centerline of the rim, hold the hub with the right side down.

AERO RIMS

Spoke holes on some deep section aerodynamic rims exit from the edge of the "V" along the center line of the rim. Such holes, although centered, are usually slanted within the rim to accommodate spokes from the left and right flanges of the hub. The holes must be angled because the rim is too thick to allow nipples to swivel. The angle of these holes gives them an offset where they emerge in the bed of the rim. Therefore, with the rim lying horizontally, holes offset upward in the bed of the rim slope down to the center line and are to be treated as downward holes for the following instructions. Failure to accommodate this orientation will cause early spoke failure.

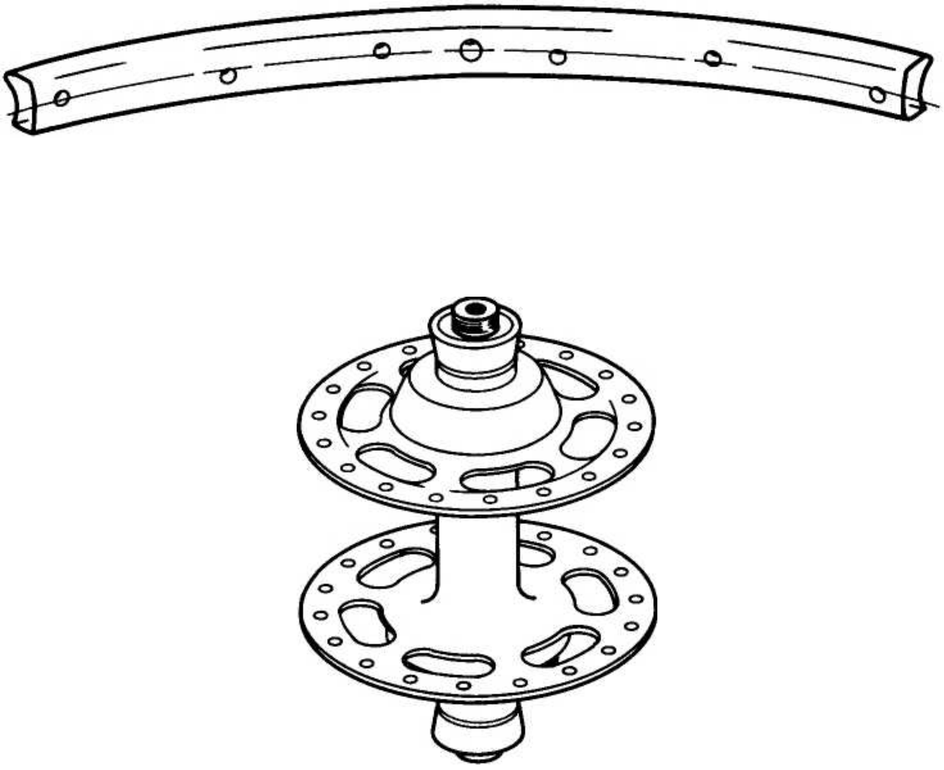

Figure 40. Starting position for the rear hub

ALL HUBS

- With the rim on your lap and the valve stem hole on the far side, hold the hub with its axle vertical and drop an inbound spoke into every second hole of the upper flange, leaving one empty hole between each spoke.
- With the rim on your lap and the valve stem hole away from you, the alternate up and down offset of the rim holes should be visible. Sometimes this offset is slight and difficult to see. Put one of the inbound spokes into the hole that is next to the valve stem hole and offset upward. For rims having holes with no offset, the first spoke goes to the left of the valve stem hole.
- Screw a nipple onto this spoke with about four turns.

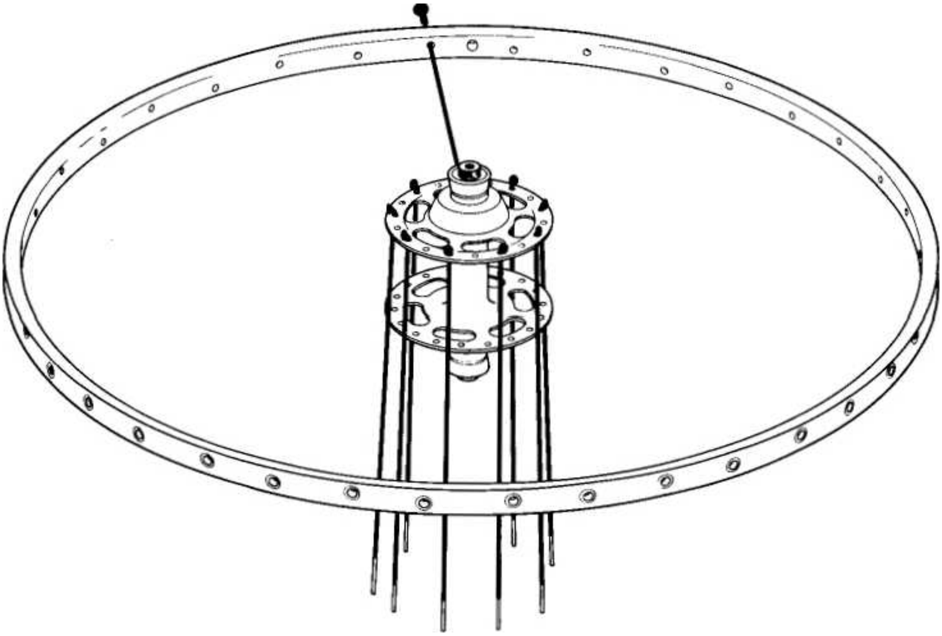

Figure 41. Inserting the first spoke

THE FIRST SET

- Insert the remainder of these inbound spokes into every fourth hole in the rim, leaving three empty holes between spokes. All of these spokes go into holes that are offset upward. Secure each spoke with a nipple screwed on about four turns.

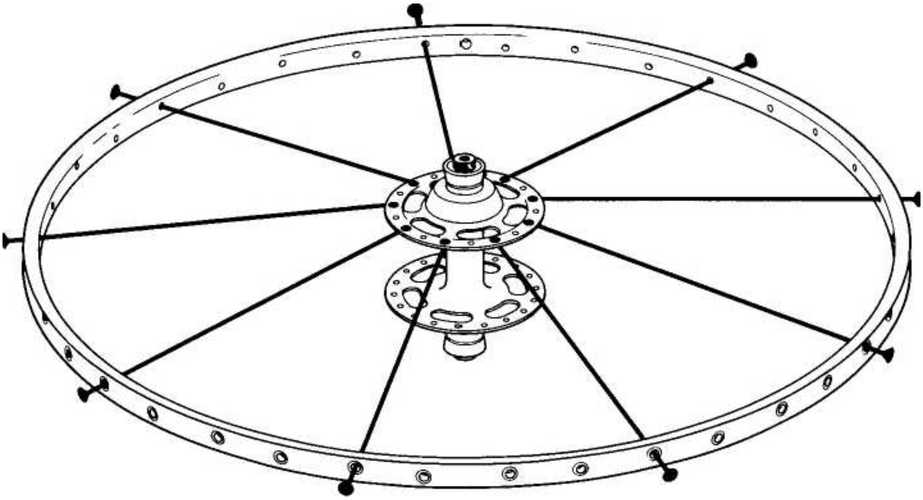

Figure 42. The first set of spokes

THE SECOND SET

- Turn the wheel over before inserting the second set of inbound spokes. Select the hole in the rim that is next to the first spoke of the first set and one hole farther away from the valve stem hole.
- Carefully select a hole in the upper flange that lies next to the first spoke and to the same side as the selected hole in the rim.
- Instead of lying directly opposite each other, the hole patterns in the flanges are offset a half space. To find the flange hole that lies on the correct side of the first spoke, insert a spoke through the upper flange, allowing it to butt into the other flange next to the first spoke. When this spoke is held parallel to the hub axis, it should be apparent whether it lies on the correct side of the first spoke of the first set.
- Insert this spoke in the selected rim position and secure it with a nipple about four turns.

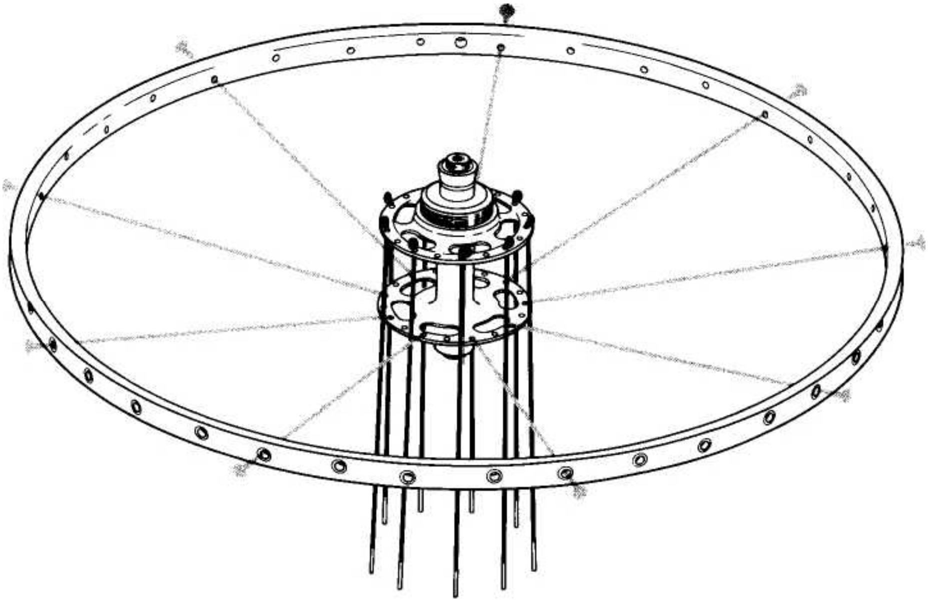

Figure 43. The second set of spokes

- Insert the rest of these inbound spokes into every second hole of this flange. These spokes go into every fourth hole in the rim beginning with the spoke just installed. Rather than crossing each other, the two sets of spokes should lie in a regular radial pattern.
- Thread a nipple on each spoke about four turns.
- Spoke spacing in the rim and hub should be in a regular pattern of two adjacent spokes and two empty holes in the rim. There should be a spoke in every second hole of each flange with no spokes crossing others.

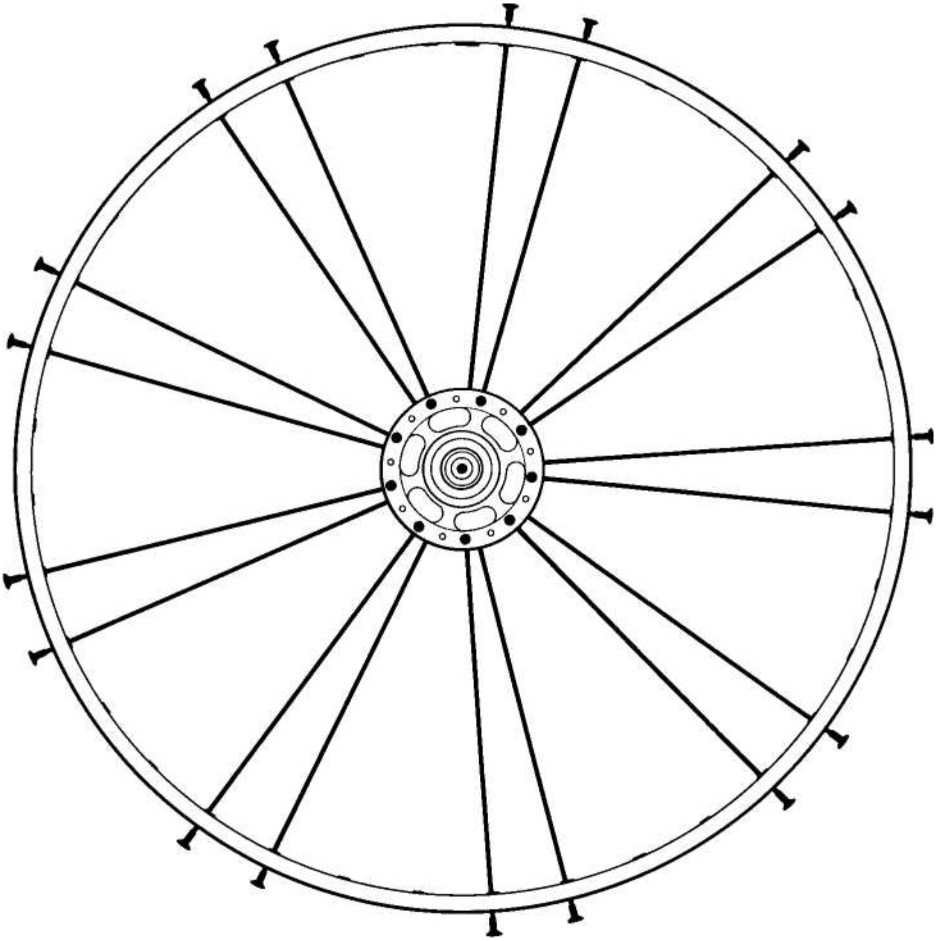

Figure 44. Inbound spokes in place

THE THIRD SET

- Without changing the position of the wheel, drop an outbound spoke into each remaining hole in the lower flange.
- Turn the wheel over and fan the spokes out to lie in the plane of the wheel.
- If the spokes fit snugly in the flange holes, you may need to fan them out by hand.

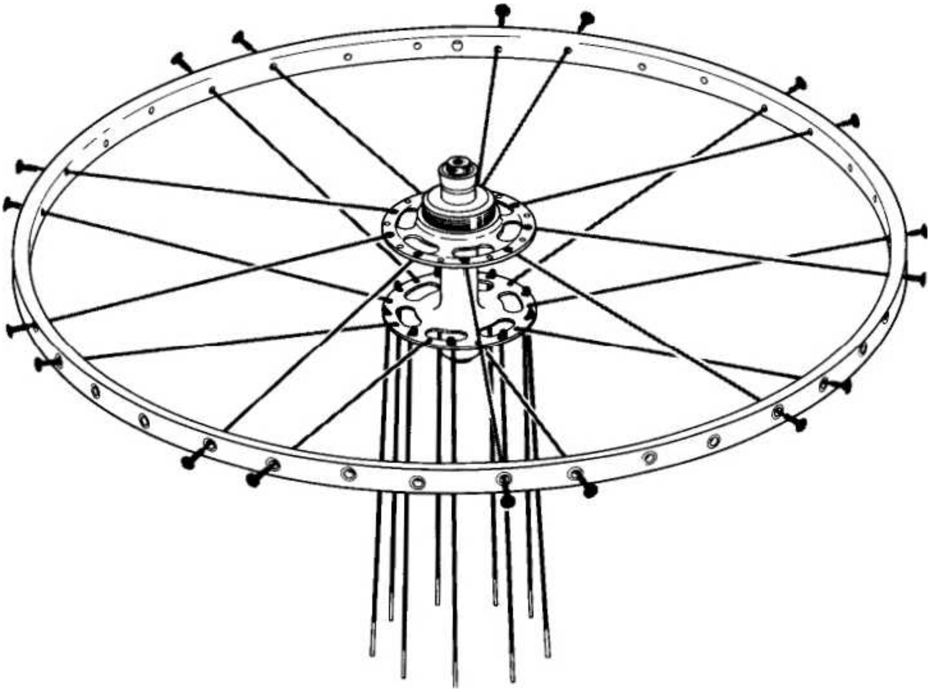

Figure 45. The outbound spokes

- If twisting the hub is difficult, all nipples may not have dropped into their holes in the rim. Seating the nipples in rims with washers rather than sockets requires extra care.
- While turning the hub, rotate the spokes in the flange holes and make them more tangent to the flange. If the nipples were screwed on more than a few turns, the hub cannot be properly rotated.
- If you still cannot engage the spokes in the nipples, either the number of crosses is incorrect, or the spokes are too short.

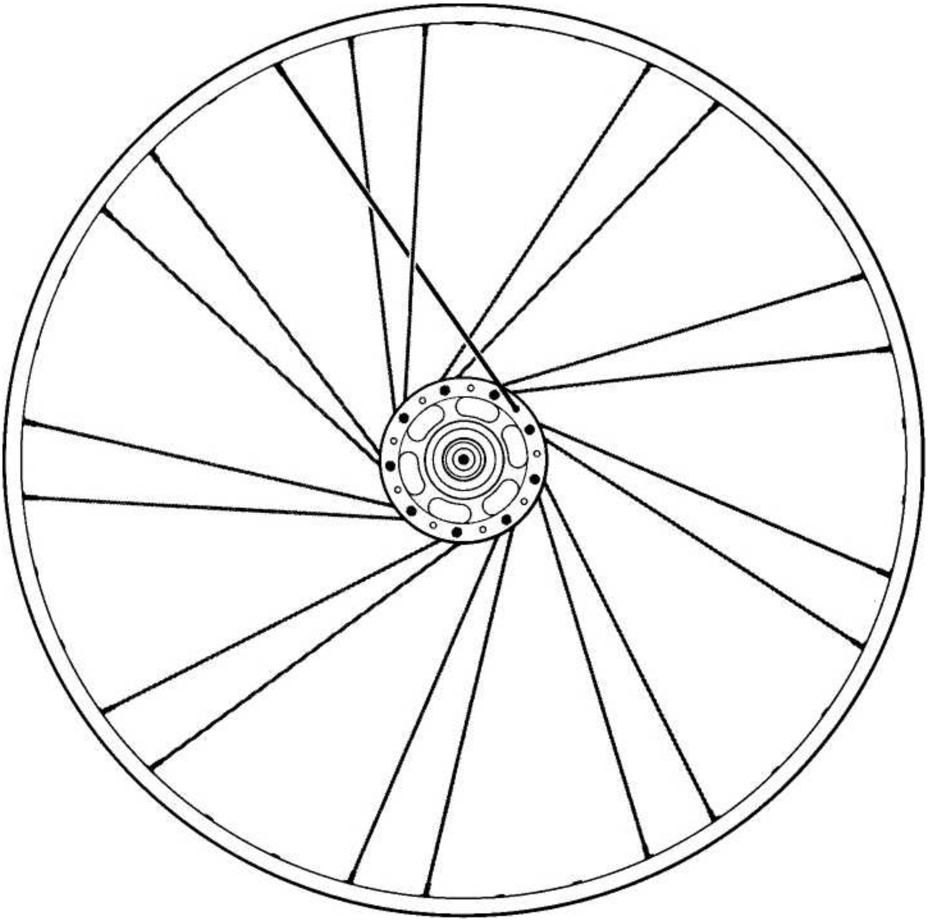

Figure 47. Crossing the spokes

THE FOURTH SET

- Insert the last set of outbound spokes into the remaining empty holes in the lower flange, then turn the wheel over and proceed as before.
- When all the spokes are in place drive the outer spoke crossings inward toward the hub with a screwdriver handle where they cross (see fig. 48). The wheel should have a completely uniform spoke pattern. Make the following check for errors:

1. The valve stem hole should lie between two nearly parallel spokes, leaving space for the tire pump.
2. All spokes should enter holes in the rim, offset toward their respective flanges (if the rim holes are offset).
3. Each pair of crossed spokes from the same flange should occupy every second hole in the rim.
4. All of the outer spoke crossings should lie at about the same distance from the hub.
5. All spokes should be uniformly loose. If any spokes are alternately tight and loose in pairs, then they are probably in the wrong holes in the hub or rim.

Errors in spoke placement must be corrected before tightening to prevent irreparable damage to the hub.

Up to this point the assembly proceeded step-by-step in a fixed sequence. Although the processes of tensioning and truing are described in a similar manner, they are not independent. Each adjustment will affect more than one aspect of alignment. Therefore, gradually integrating lateral and radial adjustments will shorten the repetitive truing process. Try to combine centering and tensioning with lateral and radial truing.

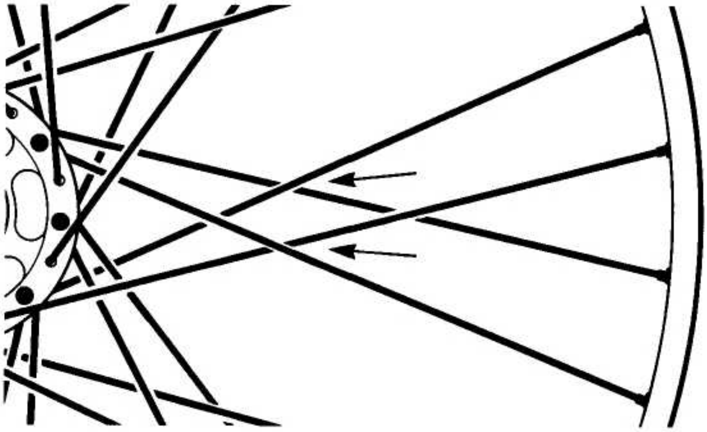

Figure 48. Drive the outer spoke crossing inward

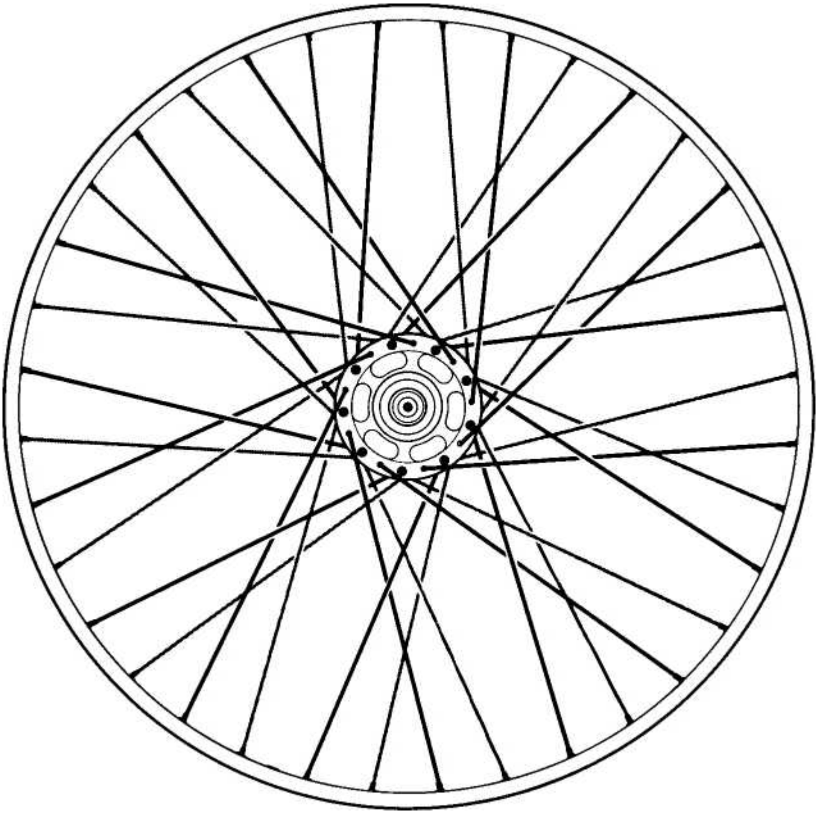

Figure 49. The completely laced wheel

TENSIONING THE WHEEL

Wheel roundness (radial trueness) depends on equal thread engagement of all spokes. While the spokes are still loose, advance all nipples to the same thread engagement so that later, when the wheel is tight, you won't need to do extensive radial truing. Because the rim was round and true before inserting the spokes, it should remain that way if you tighten all spokes uniformly . For convenience, make spoke nipple adjustments so the wrench flats are always square with the rim. With this method you can gauge even a quarter turn accurately, and it helps you engage the spoke wrench without searching. A quarter turn is a sufficiently fine adjustment for the smallest correction, so there is no need to turn nipples less.

WARNING

Tensioning spokes can be dangerous. A spoke can rupture under tension and shoot from the rim, like an arrow from a crossbow, into your eye. Never face directly into the line of the spokes while tensioning a wheel. Installing a rim tape now will prevent this from occurring.

TAKING OUT THE SLACK

Tighten all nipples using a spoke wrench or screwdriver until only two threads remain exposed where the spoke enters the nipple. Long nipples made for thick rims should be advanced until the spokes emerge from the end of the nipple and then backed out four turns. Do this accurately to ensure that the rim remains true right from the start. If spokes become ringing tight during this process, they are too short. If the spokes are still loose, the nipples may need up to two full turns more-one at a time. If they are still slack when all spokes emerge from the nipples, they are too long.

MAKING THEM TIGHT

Now the wheel is ready to be tensioned. With the wheel in the truing fixture, tighten each spoke one turn starting at the valve stem hole. If no compensation for offset has been made by using spokes of unequal length, tension rear wheels by first tightening only the spokes on the right side three turns-one turn at a time. It is best to start with the rim a bit too far to the right because the unequal angle of the left and right spoke sets will cause the rim to drift gradually toward the left with uniform tensioning. However, by tightening spokes uniformly the rim should stay nearly true, even if it does not stay centered.

Start each round of adjustments at the stem hole so that you know where you began. Check the wheel for tone after each complete round of tightening. When you get a tone by plucking the spokes, they are tight enough to begin truing the wheel. Note that some rims require spokes adjacent to the joint to be looser than others to correct for their greater thickness at the splice.

SPOKE TWIST

When spokes are tightened, they twist from thread friction and from the slope of the thread. The amount of twist depends on the length of the spoke, its thickness, how tight it is, and its lubrication. If the twist is not removed during truing, it will make the wheel go out of true in use as the spokes adjust themselves. So it is important to untwist spokes by overshooting about a quarter turn with each adjustment, and then backing off again. Thin spokes twist more than thick ones, and swaged spokes twist more than straight ones. With experience, you can feel the amount of windup and how much to overtighten and back off so that no twist remains. The twist-free position is where the nipple requires the same torque to be turned either way.

TENSION BY TONE

Throughout the following sections, tone is used to compare tension between spokes. This is a quick way to find spokes that should be tightened or loosened when making corrections. However tone is not an effective way to gauge the tension in a wheel because the tone at a given tension varies with spoke pattern, spoke length and spoke type. A tensiometer is the best means to measure absolute tension. If none is available, compare the wheel being built with a wheel of similar design that is properly tight. If you are tone deaf, compare the feel of a good wheel by grasping and squeezing pairs of parallel spokes at midspan. When a comparison wheel is not available, use stress relieving to determine maximum practical tension.

To get a clear tone from a spoke, pluck it near the nipple with a pick or fingernail so that the higher vibration modes are excited. This avoids confusion with the mixed tone from two spokes that touch at their crossing. Radially spoked wheels give a clear and unmistakable tone.

CORRECTING THE SPOKE LINE

If the spokes have a good snug fit in the flange, the outbound spokes may have a slight bow where they emerge from the spoke holes. Push these spokes down against the flange near their elbows with your thumb so that they make contact against the flange. Inbound spokes usually lie flat and need no correction. These adjustments require skills that come with practice. Most hubs have their flanges angled inward slightly to reduce the difference between the elbow bends of inbound and outbound spokes.

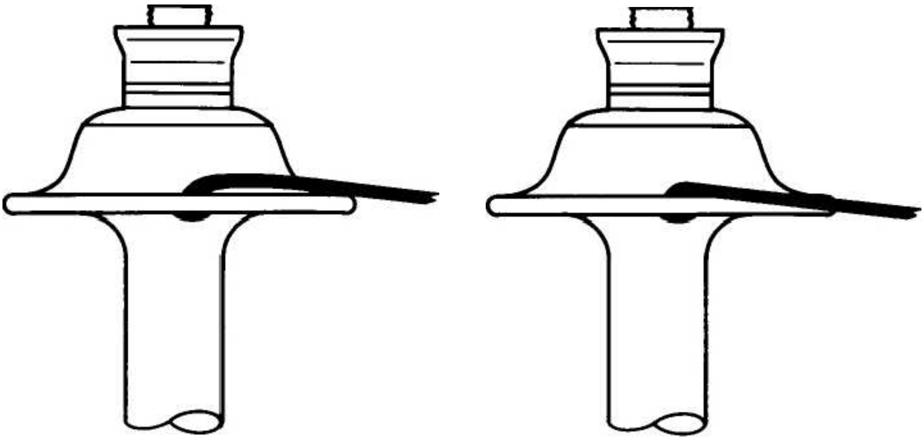

Before **After**

Figure 50. Improving the spoke line at the hub

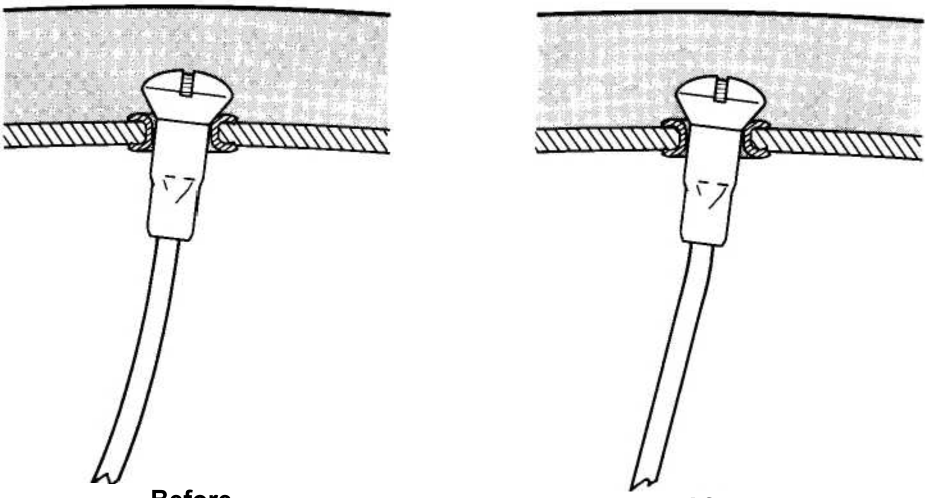

Before **After**

Figure 51. Improving the spoke line at the rim

Although nipples swivel in the rim, with large-flange hubs the spoke angle may be greater than this swivel allows. In this case spokes will curve where they enter the nipples, and these curves will flex in use causing fatigue and premature failure. In this case the desired spoke alignment is an abrupt bend where the spoke enters the nipple. This bend can be made with smooth-jawed pliers or by grasping pairs of crossing spokes near the rim and squeezing them firmly. This procedure is most effective when the wheel is moderately tensioned and should not be confused with stress relieving.

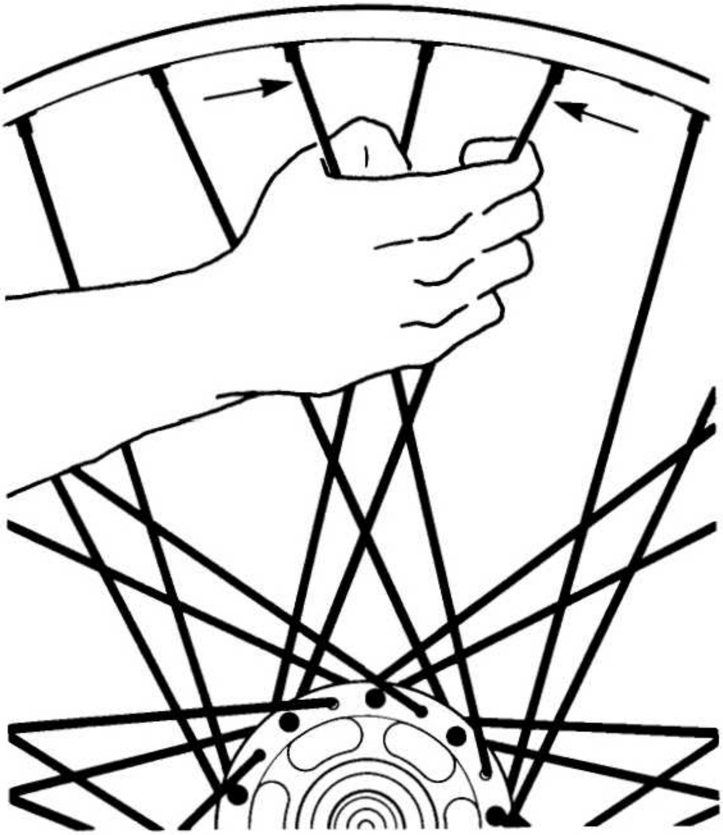

Figure 52. Manually improving the spoke line

TRUING THE WHEEL

Wheel truing is a repetitive process in which spoke tension is gradually increased while alignment and centering are improved. Since the wheel is a prestressed elastic structure, changing tension in one spoke will cause tension changes in others. Alignment changes may occur not only at the place where the adjustment is made, but at other places as well.

If nipples do not turn freely, put a drop of oil in each spoke-hole where nipples emerge from the rim to prevent galling. Check hub bearings. Loose bearings cause random wobbles unrelated to wheel alignment.

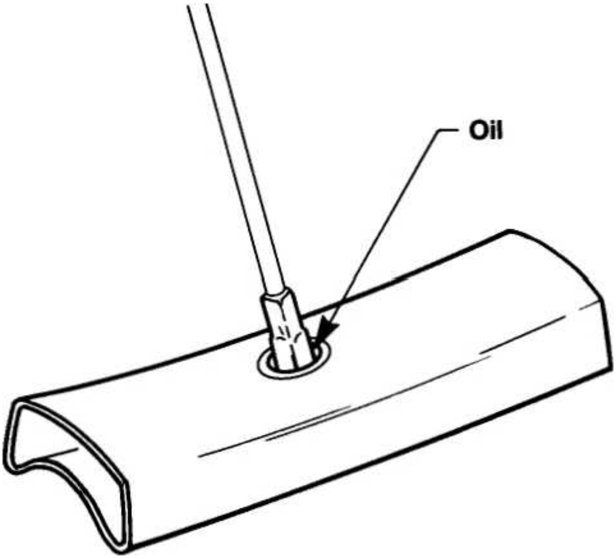

Figure 53. Oiling the nipple sockets

SMALL AND LARGE ERRORS

The scale of alignment errors depends on whether they are radial or lateral. Small lateral errors are one-half millimeter or less and can be corrected by tightening and loosening opposing spokes about a quarter turn. The smallest errors require as little as a quarter turn on one side of the wheel only. Corrections of this magnitude also apply to centering (described later). For radial alignment, a half-millimeter change requires as much as two spoke threads and, therefore, two whole turns of the spoke nipple. Because the rim moves the same distance as the nipple, radial adjustments need be no finer than half a turn. This is about as fine as the rim manufacturing tolerance.

WHEELS WITH MULTIPLE SPROCKETS

Wheels with a large offset, do not behave the same as front wheels. Their left and right spokes lie at different angles, and therefore, respond differently to adjustments. Since the right side spokes are almost in the plane of the rim, adjusting them has relatively little effect on lateral alignment. The spokes on the left, in contrast, pull to the side at a shallower angle and have a smaller effect on radial alignment. Make allowance for these differences on wheels with large offsets.

For typical hubs with screwed-on freewheels, tension ratios - and therefore lateral adjustment ratios - for different offsets are approximately:

- six-speed 1.6 : 1
- seven-speed 2.0 : 1
- eight-speed 2.5 : 1

This means that radial adjustments on a seven-speed wheel, require turning the nipples of the right-side spokes twice as much as those on the left to keep the rim centered. However, to keep the wheel round during lateral corrections, the right- and left-hand spokes take nearly the same adjustment. For this reason it is usually simpler to ignore this effect and correct for the error in a separate step.

RADIAL TRUING

The aim of radial truing is to make the rim circular. Achieving radial alignment is difficult because it is hard to see whether there are more low spots or more high spots on the rim. If lateral errors are so great that they obscure radial errors, correct lateral alignment first. If, however, both radial and lateral trueness are poor, work on the worst areas of each until the alignment is good enough to allow a systematic approach.

Set the reference probe on the truing fixture so that it just touches the outer edge of the turning rim. Where there is contact, the rim is too high, so spokes in these zones must be tightened. Low zones are corrected by loosening spokes, but the wheel must have sufficient tension to prevent spokes from becoming slack upon loosening. Therefore, during early adjustments, tighten high spots first.

Check the relative tension of spokes by plucking them near the nipple. A lower tone indicates lower tension. If a loose spoke lies in the center of a tight zone, or a tight spoke lies in the center of a loose zone, adjust only the odd spoke to make the correction. A rear wheel with an offset hub will have different tensions on its left and right sides, but the spokes of each side should be uniformly tight.

Instead of focusing on the effect of a correction, proceed as if that error had gone away, rotate the wheel and look for the next largest error. Reduce errors by adjusting the worst ones first. To avoid large differences in tension among spokes, make the largest change in the center of an error, decreasing to a quarter turn at its ends. Keep tension low until the wheel is nearly true to prevent nipple damage from repeated turning under high tension. If tension becomes prematurely high, loosen all spokes half a turn before continuing.

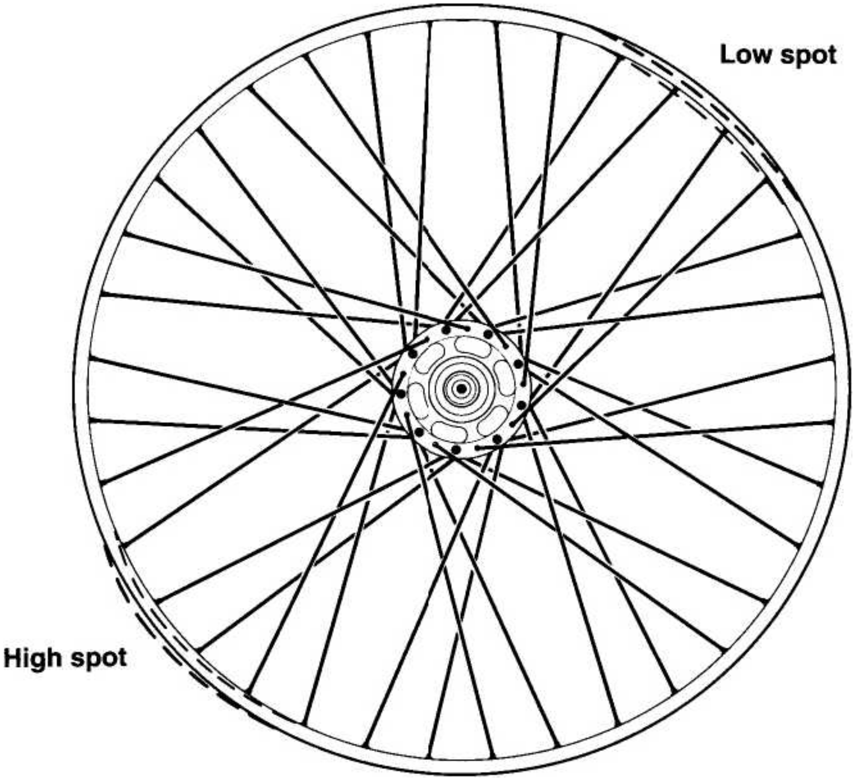

Figure 54. Radial alignment

LATERAL TRUING

Lateral truing aligns the rim so that it lies in a plane (makes it flat). If radial errors are so great that they obscure lateral errors, then correct radial alignment first. For lateral truing, adjust the reference probe on the truing fixture so that it barely touches the side of the rim when you rotate the wheel. To distinguish between left and right wobbles, visually estimate the average position of the rim with respect to the probe. Gauge relative tension by plucking the spokes. As in radial truing, if a loose or a tight spoke lies at the center of the wobble, adjust only the odd spoke to make the correction.

To correct a lateral error, tighten spokes in the error zone from one flange and loosen ones from the opposite flange. If the wobble is to the right, loosen the spokes on the right and tighten those on the left. The amount depends on the size of the error and the type of spokes and hub. However, do not exceed one turn unless you find a very loose or very tight spoke. Adjust the spokes in the middle of the wobble the most, and those on the ends as little as a quarter turn. Tighten and loosen opposing spokes equally. By just tightening or just loosening, lateral alignment may improve, but radial trueness will suffer. For offset wheels you should take into account the spoke response-to-correction ratios mentioned for *Wheels with Multiple Sprockets* (page 100).

CENTERING

Wheels must have symmetry so that the front and rear wheels will lie directly in line, and the bicycle will ride with proper balance. The rim of a correctly centered wheel lies midway between the faces of its axle lock nuts. You can measure wheel symmetry by reversing the wheel in the fixture. This will show twice the lateral-position error from the reference probe. A fixture with built-in centering that has probes on both sides can save the process of reversing the wheel, but a centering bridge gives a more precise measurement. Centering measurements show whether the axle protrudes more from one side of the rim centerline than the other.

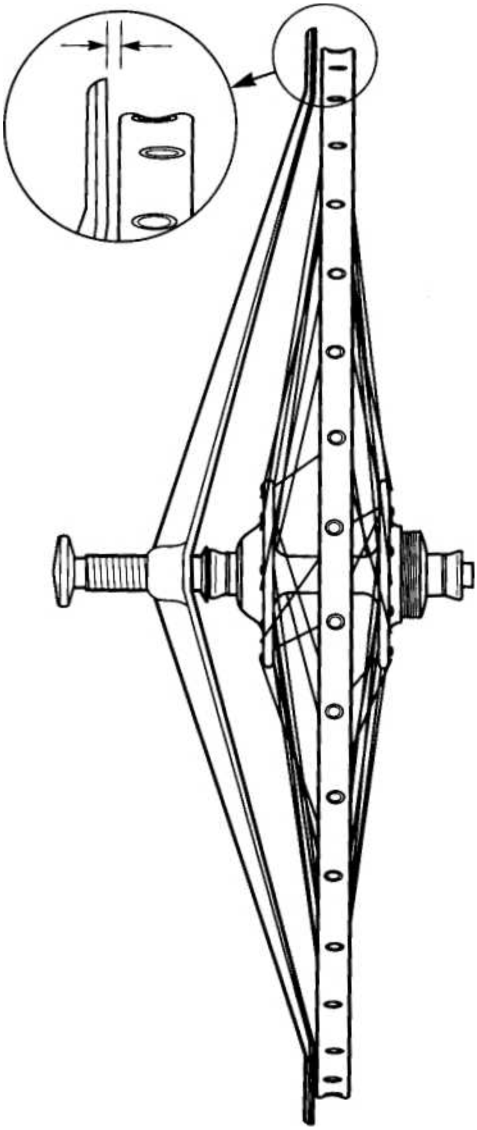

Figure 55. Centering the wheel

For centering, as with other alignment procedures, always begin at the valve stem hole and proceed around the wheel so that no spokes are missed or adjusted twice. Make corrections by tightening spokes on the side of the wheel where the axle extends too far and by loosening those on the other side. If an increase in tension is still needed, make corrections by tightening only. If tension already is high enough, alternately loosen and tighten opposing spokes to maintain equal tension. Half a turn will be enough for large errors, a quarter turn for smaller ones, and for fine adjustments, a quarter turn on one side only, or even a quarter turn on every second spoke on one side.

THE RIM JOINT

Most rims are made from straight material that is formed into a hoop and joined by welding or splicing. Sometimes the joint causes irregular alignment that is difficult to correct. For spliced rims, the extent of the error may not appear until after the spokes are tensioned. In both welded and spliced rims spokes near the joint may be looser than others, and completely correcting this error may be impossible. You can straighten the rim at the joint by the methods described under *Soft Wheel Failure* (page 114) to achieve a better balance of spoke tension.

FINAL TENSIONING

At this stage the wheel should be radially and laterally true and centered, but not fully tensioned. To achieve greatest strength, spokes should be tensioned near the maximum that the rim permits. Spoke tension can be measured directly with a tensiometer, or it can be determined by comparing the tone of the wheel to another properly tensioned wheel with the same components. Pluck the spokes as described in *Tension by Tone* (page 96). You can accurately match tension among spokes to by matching their tone. Assuming the rim was initially straight, all spokes on each side of a straight wheel should give the same tone. For offset rear wheels, the spokes on the right side should have a uniformly higher tone than those of the opposite side. Nonuniform tone indicates a tension imbalance that will eventually cause wheel misalignment.

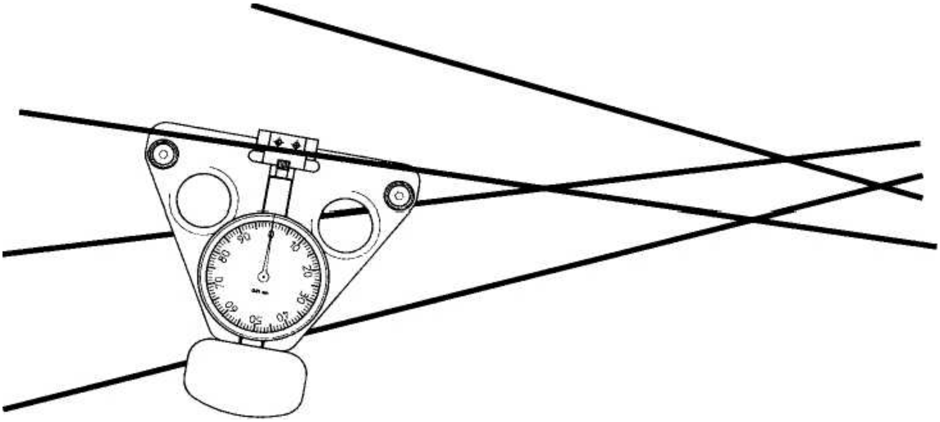

Figure 56. Measuring tension

FINDING THE RIGHT TENSION

The following method works well in determining proper spoke tension for conventional road rims of up to 430 grams with 36 spokes. Tighten all the spokes a quarter turn at a time, starting at the valve stem hole. Once a distinct tone can be made by plucking, and spokes are not easily squeezed together by grasping them in pairs, it is time to check tension. After each round of tightening, test the tension by stress relieving. If the wheel becomes untrue in two large waves during stress relieving, the maximum, safe tension has been exceeded. Approach this tension carefully to avoid major rim distortions. When the wheel loses alignment from stress relieving, loosen all spokes a half turn before retruing the wheel.

Stress relieving, discussed in a following section, increases tension enough to overload the rim if the spokes are too tight. A strong and safe wheel should be able to withstand about a ten percent overload without damage. Note that tightening all spokes of an offset rear wheel will move the rim away from the right side as described under *Wheels with Multiple Sprockets* (page 100). Check centering and radial and lateral alignment again. Only small corrections, if any, should be required.

With large cross section mountain bike and deep section aero rims the tension of 36 spokes may not exceed the strength of the rim. For such heavy rims and conventional road rims using fewer than 32 spokes, tensioning is usually at the limit when the nipples can no longer be tightened easily.

BALANCING TENSION

Although the wheel may now be true, it must be fine-tuned to ensure that it will remain true. If spokes are not equally tight they will equalize during use and cause misalignment. Find tighter and looser spokes by their tone and equalize their tension. For instance, a spoke that is a half turn looser than its neighbors on the same side of the wheel should be tightened and its two neighbors should be loosened a quarter turn to keep alignment unchanged. Rim imperfections and discontinuities of the rim joint make achieving complete uniformity impossible without losing alignment. Of course, offset rear wheels are tighter on the right side than the left. After balancing tension as well as possible, true the wheel again if necessary.

STRESS RELIEVING

Although stress relieving is one of the most important operations in wheel building, itis often omitted. Failure to stress relieve is the most common cause of spoke failure in an apparently sound wheel. This process is analyzed in detail in Part I.

To stress relieve, grasp the most nearly parallel pairs of spokes at midspan on both sides of the wheel. Your hands should be nearly palm-to-palm. Squeeze the spokes hard. For hand protection use leather-faced gloves. Repeat the process of squeezing opposing pairs until all spokes have been stretched. If, after stress relieving, the wheel is appreciably out of true in two smooth waves, then tension was too high, and retruing should begin by relaxing tension of all spokes half a turn. Usually, only small lateral corrections will be necessary after stress relieving.

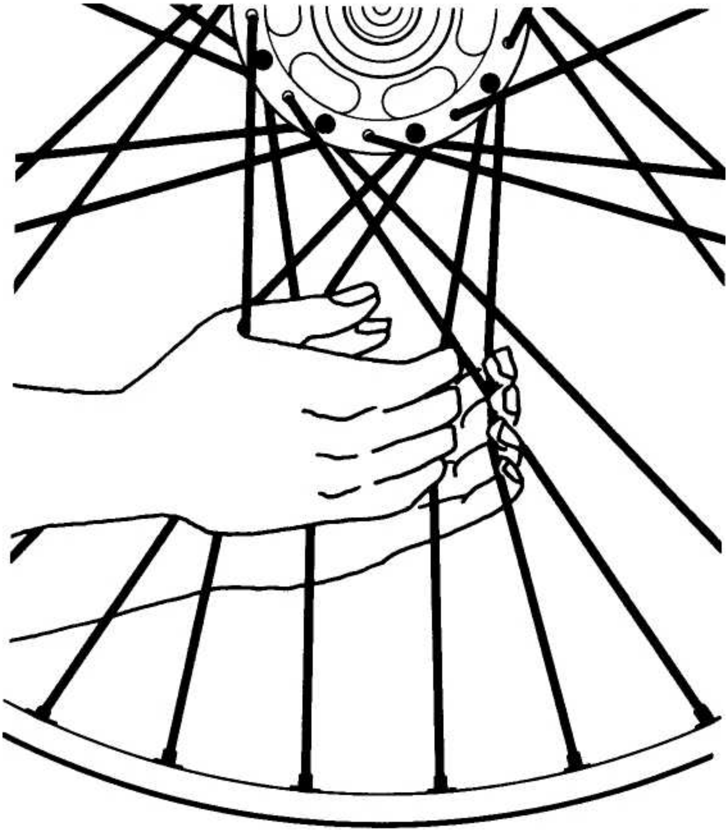

Figure 57. Stress relieving

THE WHEEL IS FINISHED

After stress relieving and final truing, the wheel is ready to use. Road test the new wheel to check the quality of your work. As you ride, lean as far as possible to each side while standing on one pedal. No sounds should come from the spokes. Clicking or tinkling indicates that they are untwisting and changing thread engagement. Such movements cause alignment errors that would gradually appear in the first few miles. If the source of spoke twist is unclear, review the section *Spoke Twist* (page 96).

The following sections treat optional features that apply in special cases.

OPTIONAL SPOKE PATTERNS AND FEATURES

Spoke patterns other than cross-lacing are possible. The merits of these are discussed in Part I. Radial spoking, the only pattern other than cross lacing commonly used, is described here, as are special procedures for hubs with keyhole-shaped spoke holes and high-low-flange hubs.

RADIAL SPOKING

Flange stress at the spoke holes of a radially-spoked wheel is higher than for any other spoke pattern. Because this high stress can lead to flange failure, radial spoking is not recommended for aluminum hubs. Radial spoking requires no special starting point, has no preferred sequence of spoke insertion and, therefore, is relatively simple. To lace radially, hold the hub vertically and drop a spoke into every hole of the lower flange. With the rim on your lap, insert these spokes into alternate rim holes that are offset downward. Screw a nipple onto each spoke about four turns. Turn the wheel over, and insert the remaining spokes in the same manner. Radial spokes can be laced either all inbound or all outbound or alternating. With all outbound spokes the wheel will have the widest effective flange spacing; with all inbound spokes it will have the lowest flange stress. Truing is the same as for tangential spokes.

KEY-HOLED HUBS

Some hubs are made with keyhole-shaped spoke holes. With this design spokes can be inserted head first and need not be threaded through the holes in the flanges. Although keyholes give poorer spoke support than closely fitting holes, they are necessary when one flange is substantially larger than the other, and when spokes that do not fit through the standard holes are used. Hub brakes and generator hubs often have keyholes in their smaller flange. If both sides of the wheel will have the same cross pattern, lace these hubs in the same way as an ordinary hub. Insert the spokes through the rim first, and thread nipples onto the spokes before hooking them into the keyholes. After inserting the spokes, plug the keyholes with wooden matchsticks or small pieces of rubber tubing to keep them from falling out before they are tightened.

If the flange diameters are different, use a fully tangential pattern on the smaller flange and crossed-one or -two on the larger flange. This will give nearly equal spoke angles at the rim, and makes a better looking wheel because all the spokes cross at about the same distance from the hub. Wheels with two spoke patterns are best spoked one side at a time since each pattern requires an independent assembly.

MIXED SPOKE PATTERNS

Wheels with two different spoke patterns are built by choice or, with some hubs, by necessity. The flanges of drum brake hubs and hubs with integral generators generally have such a large size difference that the same spoke pattern may not be appropriate for both sides of the hub. Such wheels are best laced one side at a time although by this method the inbound spokes of the second side must be laced through the crossed spokes of the first side.

LACING ONE SIDE AT A TIME

The general method for lacing wheels, previously described, applies to the point where the first set of inbound spokes is engaged in the rim. After the first set of inbound spokes is in place, turn the wheel over and insert spokes into the remaining holes in the same flange. Then turn the wheel over fanning the spokes so that they lie in the plane of the wheel. Rotate the hub so that the spoke next to the valve stem hole pulls away from the hole. Cross one of the loose spokes over the number of adjacent inbound spokes required by the selected cross pattern, crossing over the first ones and under the last one. This spoke goes into the second empty hole in the rim beyond the last spoke crossed. At first it may seem too short to reach this hole, but if the hub is rotated properly and the nipples are seated in the rim, the spoke should reach easily.

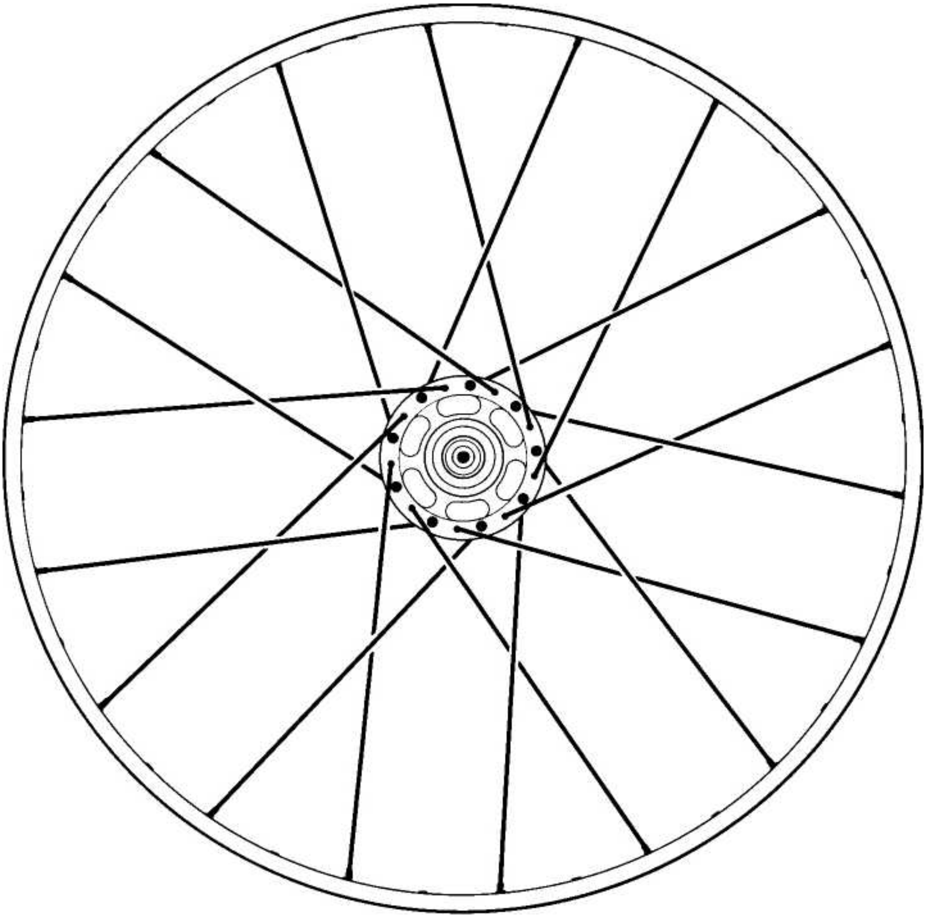

Figure 58. Crossing the spokes

The second side of the hub can be laced in the same pattern or a different one. In either case the inbound spokes go into holes in the hub that are a half space farther away from and to the same side of the valve stem hole as the first spoke. If the same cross pattern is used, then one of these inbound spokes should lie nearly parallel to the first spoke, and one hole in the rim farther away from the valve stem hole. The method for placing this first inbound spoke of the second side is described in the general section on lacing spokes. If this side is to have one fewer crosses than the first side, this spoke goes into the rim one empty hole farther away from the stem hole than if the patterns were the same on both sides. For each crossing less, add one empty hole; for each crossing more, subtract one empty hole.

Insert the inbound spokes of the second side so that they enter the large openings between the spokes of the first side. Then they can be pulled between the loose spoke crossings of that side with only a minor bend. After placing the first inbound spoke of the second side and threading a nipple on it, insert the rest of the inbound spokes into every second hole in the hub and into the proper holes in the rim. Now the remaining empty rim holes should be equally spaced.

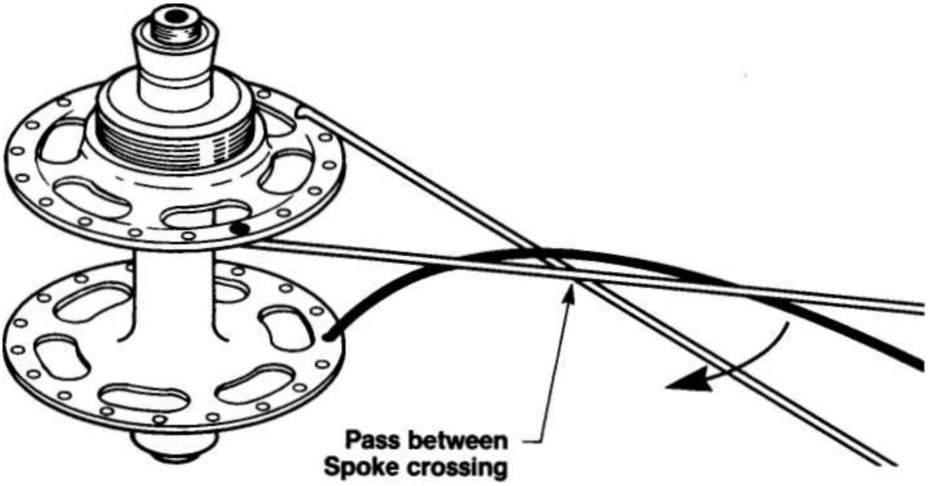

Figure 59. Threading spokes through crossed spokes

Turn the wheel so that the empty hub holes are in the lower flange and drop a spoke into each of these holes. Turn the wheel over again while fanning the spokes so that they lie parallel to the plane of the wheel. Cross a loose spoke over as many adjacent inbound spokes as the selected cross pattern requires. Cross it over the first ones and under the last one. Put the remaining spokes in the rim in the same manner, and screw a nipple onto each about four turns. Now the wheel can be trued as described in the general truing section.

TYING AND SOLDERING

Tying and soldering the outer spoke crossings has been practiced by some wheel builders for many years. The purpose of this procedure is discussed in Part I. To tie and solder, wrap the interlaced spoke crossings firmly together using fine (about 0.5 mm) pretinned copper wire one layer thick over about four millimeters of the outer crossings. Lock the loose end under the last wrap. After completing all ties, solder them so that the solder wets both the wire and spokes. Use rosin core solder for zinc- or cadmium-plated spokes, and acid core for stainless, nickel-, or chrome-plated spokes. Use a high-temperature soldering iron, but not a flame because it can easily anneal the spokes. Remove residual acid flux with hot water and soap or baking soda.

Figure 60. Tying and soldering

WHEEL REPAIR

Many damaged wheels can be repaired. A broken spoke, the most common failure, is the easiest to repair. Rim damage is usually more difficult to fix, and sometimes even a skilled wheel builder cannot true a rim bent at the stem hole or the joint, even though the bend is slight.

SPOKE FAILURE

When a spoke breaks from fatigue - the most common cause of breakage - it causes some loss of wheel alignment. However, if the spoke was forcefully broken, there may be a visible bend in the rim. A radial bump may not be repairable without removing several spokes so that it can be hammered or pulled out. A lateral bend spanning fewer than four spokes is called a kink and may need forceful straightening. If there is no kink, a new spoke can be inserted and tightened to the tension of its neighbors.

If replacing and tightening the spoke does not retrue the wheel, the rim can be straightened by bending it against the floor. With the rim touching the floor at the new spoke, and with the new spoke on the top side, press down on the rim with your palms about four spokes to either side of the new spoke. This force, together with the force from the new spoke, should restore rim alignment. This method should only be used if the rim misalignment is less than ten millimeters; otherwise treat the damage as described in the following section on *Soft Wheel Failure.*

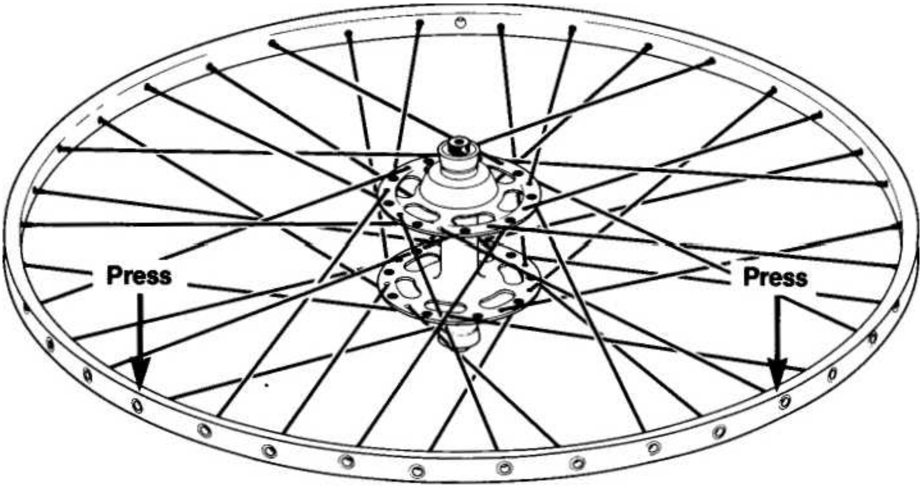

Figure 61. Straightening the rim

Correct the spoke line of the new spoke and stress relieve the whole wheel as previously described. Stress relieving may break other fatigue-damaged spokes. Finally, true the wheel in the conventional manner. If the new spoke has higher than *average* tension, the process of pressing the rim against the floor should be repeated

SOFT WHEEL FAILURE

In a soft failure the rim has a smooth and continuous bend, and some of the spokes have become loose. If the wheel is deformed laterally more than ten millimeters, all nipples, even on spokes that have no tension, should be unscrewed two turns before attempting to straighten the wheel. Straightening the rim by bending it without first unscrewing the nipples would, in effect, straighten and tension the wheel at the same time. Straightening makes the rim yield and take a new shape. When yielding, it will deform not only in response to the straightening forces, but also to the spoke tensioning forces. If the nipples are not unscrewed, the combined forces would cause kinks in the rim at each spoke.

To repair such a bent or collapsed wheel, first loosen all nipples about two turns (one turn if the wheel was loosely spoked). Lay the wheel on its side with the largest wave toward the floor and press down on the rim on either side of the bend. If necessary, repeat this process turning the wheel over until the rim is reasonably straight. Now place the wheel in the truing stand for tensioning and truing. If the misalignment is still more than ten millimeters, repeat the procedure on the floor while gradually tensioning the spokes. Now the wheel can be trued as previously described. Because straightened rims usually have nonuniform spoke tension, the wheel may not stay true.

DENTED RIM

Although some dents can be repaired satisfactorily, this procedure is generally used only to make a wheel usable until the rim can be replaced. As with soft failure, this repair makes the rim yield. If the wheel is tensioned while it yields, further damage will occur from the combination of spoke tension and straightening forces. Therefore, spoke tension must be relaxed about two turns before straightening the rim. If the rim curves inward at or near a spoke, the spoke at this point must be removed. Straighten the dent with a shaped piece of wood and hammer. Specially shaped pliers are available to reshape some rims. After the dent is repaired, true the wheel as in *Soft Wheel Failure.*

Sidewalls on clincher rims are sometimes bent, usually inward toward the tire. These dents can be straightened with a large adjustable wrench. To uncurl the sidewall, set the jaws of the wrench closely; with a wider setting bend it outward. These adjustments should be made gradually and at several places along the dent to avoid ripples.

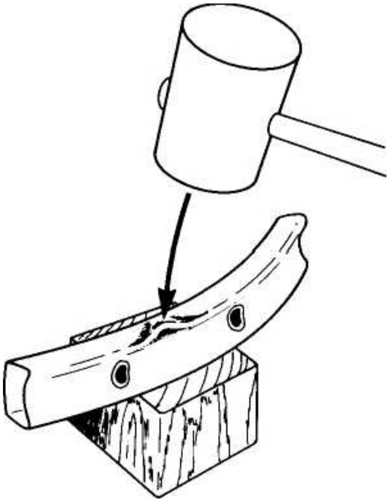

Figure 62. Repairing a dented rim

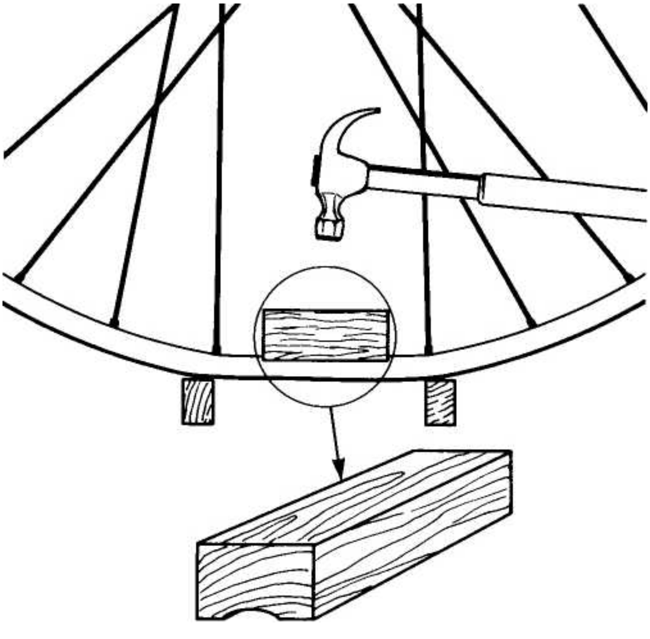

Figure 63. Repairing a radial dent

REPLACING A RIM

When replacing a rim, the spokes can be saved and the wheel rebuilt more easily than starting from scratch. If the wheel is still somewhat round, and has no history of spoke failures, the spokes can be transferred from the damaged rim to a new one. Lay the new rim on top of the old one so that the valve stem holes lie side-by-side. Adjacent spoke holes in the rims must be offset to the same side. Spoke hole location takes precedence over the stem hole location.

Unscrew nipples one at a time and transfer each spoke to the new rim. Only spokes that cannot be straightened by hand need be replaced. Replace nipples with deformed flanks and ones that were difficult to unscrew. Lubricate the threads of the spokes before engaging the nipples. After transferring all spokes, the wheel can be trued the same way as a newly built wheel.

REUSING SPOKES

The spokes of wheels destroyed in crashes are seldom broken unless they struck an obstacle. Because spokes are usually only bent, but not otherwise damaged, in a crash, they can be reused. The wheel responds to loads by relaxing tension, so spokes are rarely overstressed in a crash even though the rim is destroyed. However, the spokes should not be removed from the hub. They should be reused as described in *Replacing a Rim.* Because they have been stress relieved and have acquired a form unique to their location in the hub, they should not be used in new positions in a different wheel. By coincidence some may do well if reused, but the probability of a number of mismatches precludes reuse after unlacing.

If a rim is to be replaced by a bicycle store, the shop will usually insist that all spokes be replaced as well. The shop will not want the quality of its work measured by possible failures of used and unknown spokes.

OPTIONAL TOOLS AND THEIR USES

Few tools are required to build good wheels. In fact a bicycle and a spoke wrench are adequate equipment. However, a few other items described here can increase the speed and convenience of building and truing wheels.

TRUING STAND

A bicycle can be used as a truing stand by using the brake as the gauge point against which to measure misalignment. Adjusting the brake caliper so that one pad is close to the rim makes this easier. Some builders prefer to use their thumb as a gauge even when using a well-equipped stand. The best truing stands are rigid and feature fast wheel mounting, an easily adjustable gauge point, and adjustment for different hub widths and wheel sizes. In addition, some deluxe versions may have automatic centering, dial gauges for measuring radial and lateral alignment, lighting, rim straighteners, and other features.

Although dial gauges have a precision that exceeds the requirements of wheel truing, they have their merits. By quantifying errors, a better picture of the truing task emerges, and the mean centerline can be found more easily. Numerical values also enable the builder to know when a tolerance has been met. However, either with or without dial gauges, truing is a repetitive process.

CENTERING TOOL

When properly built, both front and rear wheels are centered between their axle lock nuts. While truing a wheel, it may be centered by reversing it in the truing fixture. If the rim is not in the same location after reversal, the wheel is not centered. This cumbersome procedure can be simplified by a centering tool.

A centering tool measures quickly and precisely how well a wheel is centered. The tool consists of a bridge that spans the diameter of the wheel and has an adjustable probe in the center that contacts the axle lock nut. To measure which end of the axle protrudes farther from the center of the wheel, the bridge is placed on the rim and the probe is advanced until the ends of the bridge begin to lift off the rim. Holding one end against the rim, tap the free end of the bridge against the rim to determine when the probe has made contact with the lock nut. Then place the bridge on the opposite side of the wheel. If the probe does not reach the lock nut, this is the side of the wheel where the axle does not protrude far enough. Repeat the preceding process on this side of the wheel. Then place the bridge on the side of the wheel where the axle protrudes farther and press one end against the rim. The space between the bridge and the rim at the other end is four times the centering error. This fourfold magnification results from the sum of two differential measurements.

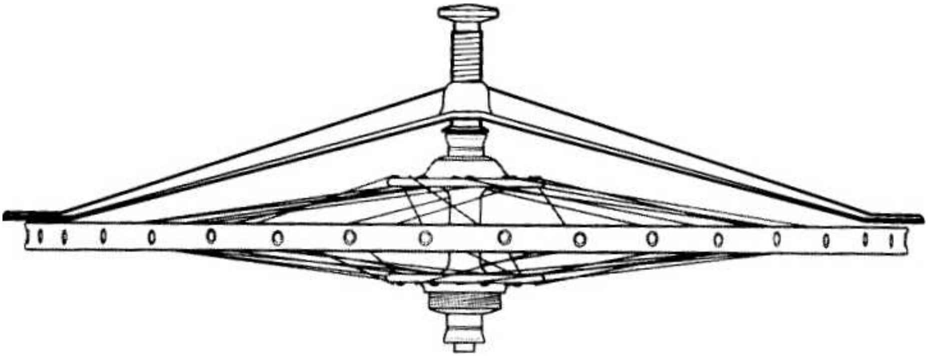

Figure 64. Centering tool

NIPPLE DRIVER

A special spoke nipple screwdriver with a pilot pin in the center of its blade simplifies engaging nipples and bringing spokes to the correct thread engagement. The pilot pin fits into the nipple so that the advancing spoke ejects the screwdriver at a constant thread engagement. This type of blade is used either with a power screwdriver or a crank handle. The crank handle type is easier to control.

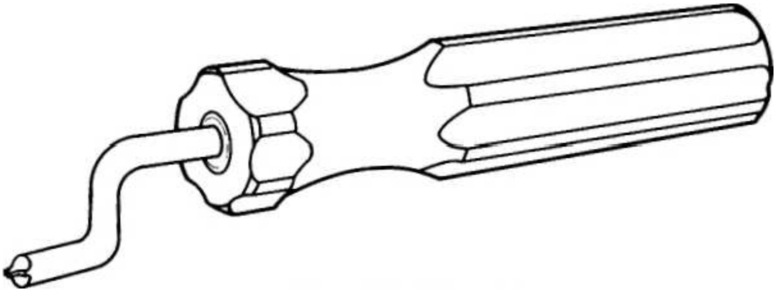

Figure 65. Nipple driver

TENSIOMETER

The final tension of a wheel built by feel is affected by the mood of its builder. By using a tension measuring tool a builder can establish proper tension, then repeat it. Such a tool, a tensiometer, measures the deflection of a spoke over a given span in response to a standard load. The dial is calibrated in tension or displacement. Either measure is equally useful for wheel building. It is not necessary to know the actual tension but only that the tension has reached the desired mark. The correct maximum tension for a specific wheel design must still be determined first by stress relieving. For some deep section rims or wheels with few spokes, the limit of tension is reached when spokes can no longer be tightened further without excessive windup. For subsequent wheels of the same type the tensiometer can accurately and quickly determine whether spokes have reached the predetermined tension.

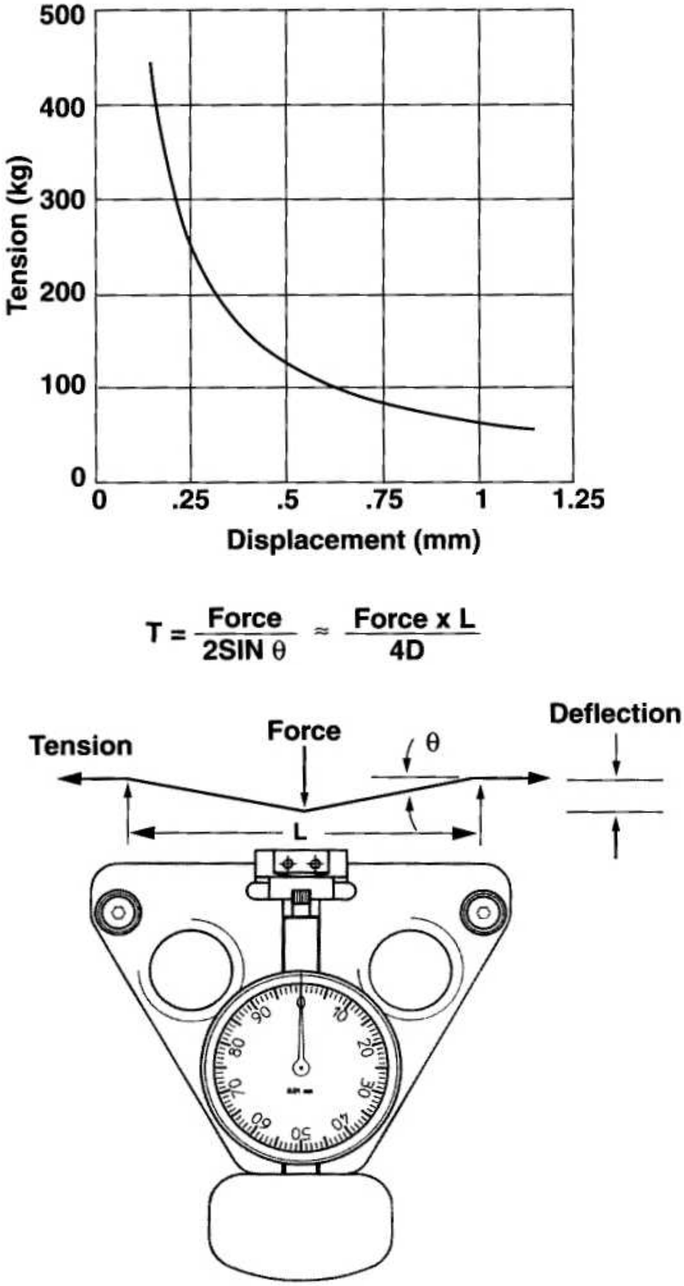

$$T = \frac{\text{Force}}{2\text{SIN}\,\theta} \approx \frac{\text{Force} \times L}{4D}$$

Figure 66. Tensiometer

PART III

EQUATIONS AND TESTS

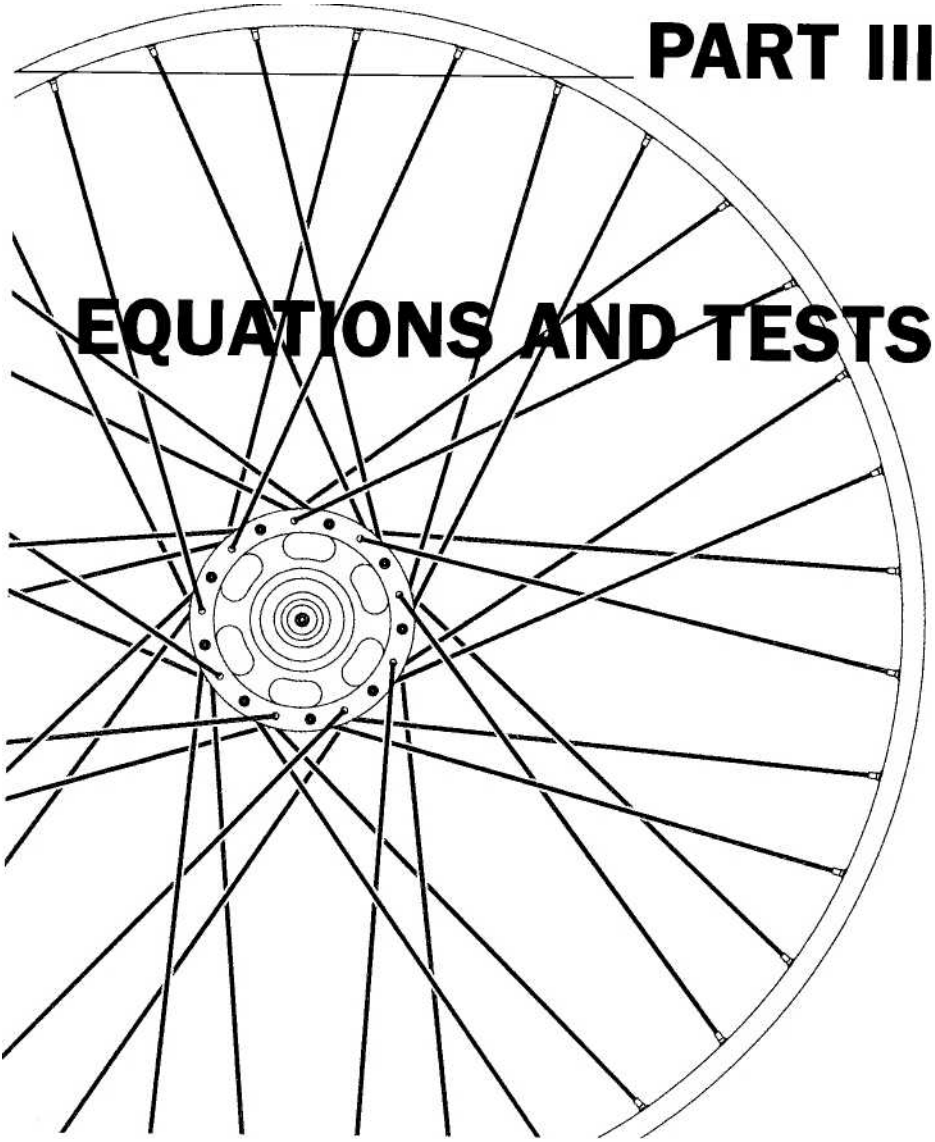

INTRODUCTION

Measurements were made to confirm computed values and to validate the theoretical models used. Tensile tests were performed to determine elastic limit, ultimate strength, and ductility of various brands and types of spokes. The pictured tensiometer was built to verify tensions, and its computed deflection versus tension characteristic was verified by the tensile tester. Spoke fatigue resistance was not tested for lack of suitable equipment. Wheels were tested for distribution of vertical loads among spokes. Stiffness and strength under lateral and torsional loads were measured before and after tying and soldering.

TYING AND SOLDERING

A small- and large-flange rear wheel were each tested for lateral and torsional elasticity. The hub of the wheel being tested was securely held in a machine tool vise by means of a modified freewheel core. A dial gauge was mounted on the machine table to observe displacements. Lateral deflection caused by a 160 N vertical force applied repeatedly at four different locations remained unchanged within 0.05 mm before and after tying the spokes. The same arrangement was used to measure torsional deflection.

For the torsional test a steel cable was wrapped around the rim and anchored to the valve stem hole. A pull of 3 00 N on the wire produced a rotational movement of 1.65 mm on a large-flange wheel with 36 swaged spokes, and 3.43 mm on a similar small-flange wheel. The measurements were repeated several times and averaged, both before and after tying. The results in each case showed a change of about 2 %. This was also the variance of the measurements that were averaged. For the small-flange wheel the deflection decreased when tied, and for the large-flange wheel it increased. It is apparent from these results that tying and soldering of spokes has so little effect - if any-that it is difficult to detect even by precision measurement.

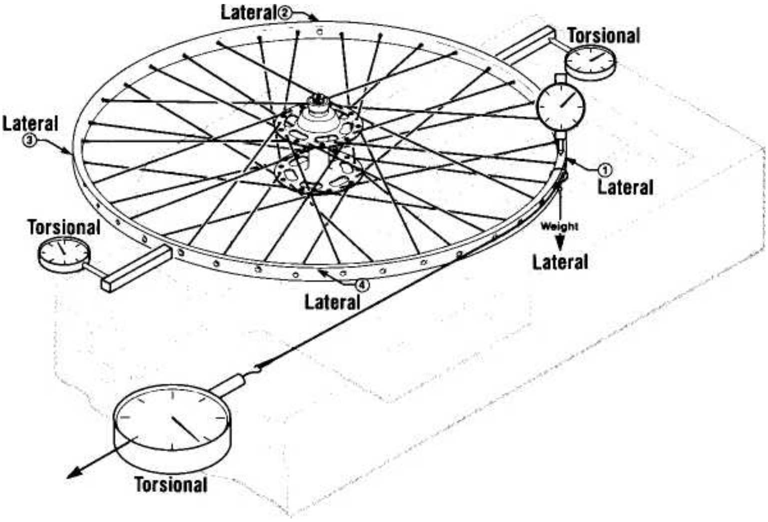

Figure 67. Lateral and torsional strength

SPOKE STRENGTH

Swaged and straight gauge spokes in 2.0 and 1.8 mm diameters of two typical high-quality brands were tested for ultimate strength and ductility. In contrast to spokes tested for the first edition of this book, these spokes withstood substantial elongation before failure indicating improved spoke materials. Some swaged spokes stretched more than six millimeters without breaking, at which point the test was stopped. Swaged spokes failed in their reduced diameter midsections while the straight gauge spokes failed at the elbows.

For the test, spokes were anchored between an aluminum plate simulating a flange of a high-quality hub and a standard threaded nipple. Sets of three spokes of each kind were tested, each of which produced uniform results. The curves show the average response of each set. The results show that there is little measurable difference in strength among these spokes and suggest that their differences - if any - lie in fatigue characteristics that depend on their alloy, temper, whether they are swaged or not, and how they are built into a wheel.

It appears that the better spokes now available would have made the discovery of many of the concepts in this book more difficult for lack of failure data. I am grateful in retrospect for the poor durability of earlier spokes. They operated so near their limit that durability was significantly altered by the techniques that I have outlined.

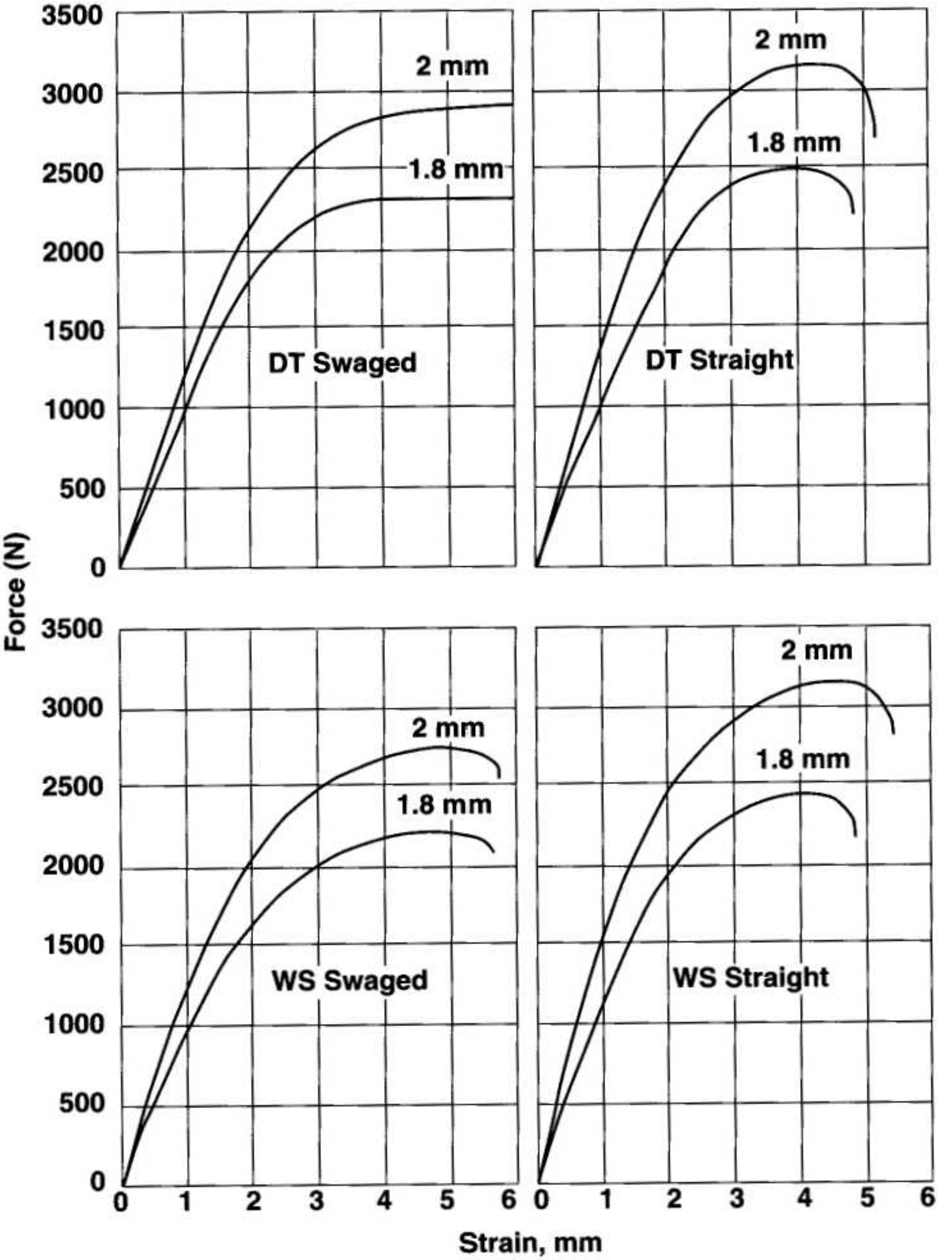

Figure 68. Spoke strength

EQUATIONS

Various structural formulas were used to determine the values that are reported. Some of these equations are shown here. The computation of the wheel deflections for various load combinations is based on the finite element method. This method divides the wheel into a series of simple structural parts that, with the aid of a computer, can be evaluated through simultaneous solution of a network of equations.

SPOKE LENGTHS

Spoke lengths can be computed from the effective rim diameter, flange diameter and spacing, and spoke pattern. The effective rim diameter is the diameter to which the ends of the fully engaged spokes will extend (flush with the end of the spoke nipple). Note that a spoke under full tension can stretch up to about one millimeter as shown in the graphs. The rim, depending on its strength, can also shrink in diameter as much as two millimeters. Therefore, the computed spoke length should always be rounded down rather than up.

The effective rim diameter is measured by dropping a nipple into a rim hole and finding how far its head lies below the outer edge of the rim. This value is doubled and subtracted from the outer rim diameter. The spoke hole diameter and the hub flange diameter (the distance from center-to-center of the spoke holes) is measured, as is the center-to-center flange spacing. These values together with the selected spoke crossing pattern and the number of spokes are used to evaluate the spoke length equation.

1. SPOKE LENGTH

$L = \sqrt{A^2+B^2+C^2} - S/2$	Spoke length
$A = (d/2) \times \sin(T)$	Spoke position offset
$B = D / 2 - ((d / 2) \times \cos(T))$	Radial component
$C=W/2$	Hub half-width
$D=618\text{mm}$	Effective rim diameter
$d=39\text{mm}$	Hole circle in flange
$W = 71\text{ mm}$	Flange spacing center to center
$S=2.4\text{mm}$	Flange hole diameter
$X=3$	Cross pattern
$N=36$	Number of spokes
$T = 360 \times X / (N / 2)$	Spoke angle

$T=360\text{x}3/(36/2)=60\text{deg}$

$A=19.5\text{x}0.866=16.89\text{ mm}$

$B =618/2 - ((39 / 2) \times 0.5) = 299.25\text{ mm}$

$C = 71 / 2 = 35.5\text{ mm}$

$L = \sqrt{16.89^2 +299.25^2 + 35.5^2} - 2.4/2 = 300.6\text{ mm}$

2. ELASTICITY OF A SINGLE SPOKE

● =AxE/L	Elasticity of spoke (N/mm)
● = 193 GPa	Elastic modulus of steel
● =290 mm =0.290m	Effective length of spoke
d = 1.6 mm = 0.0016 m	Diameter of spoke
r = d/2 = 0.0008 m	Radius of spoke
A =itxr^2	Cross section area of spoke

A = 7t x 0.0008^2 = 2.O l e-6 m^2

● = 2.Ole-6 x 193e9 /0.290 = 1.229e6 N/m = 1.34e6 N/mm

3. SPOKE ELONGATION FROM TENSIONING

dL= P / K	Elongation
● = 1.34e6 N/mm	Spoke elasticity (from Eq. 2)
● = 100O N	Tension in spoke

dL= 1000/1.34e6 = 746e-6 m = 0.75 mm

4. TORSIONAL STIFFNESS OF CROSSED SPOKING

Kt = dL x N x K x r	Torsional stiffness of hub rotation
● = 1.34e6 N/m	Spoke elasticity (from Eq. 2)
● = 18	Number of spokes per flange
r = 21 mm = 0.021 m	Effective flange radius
dL= r x 7t / 180	Spoke elongation per degree of hub rotation

dL= 0.021 x n / 180 = 0.366e-3 m/deg

Kt= 0.366e-3 x 18 x 1.34e6 x 0.021 = 195.4

● = 195.4 Nm/deg

5. TORSIONAL STIFFNESS OF A TYPICAL HUB SHAFT

● = K x G / L	Torsional stiffness (Nm/deg)
● = 25.9 GPa	Shear modulus of aluminum
rl = 5.2 mm = 0.0052 m	Inside radius of shaft
r2 = 7.3 mm = 0.0073 m	Outside radius of shaft
● = 44 mm = 0.044 m	Length of shaft
● = n x ($r2^4$ - $r1^4$) / (2n / 180)	Area moment of inertia

● = n x (0.0073^4 - 0.0052^4) / 2 = 3.312e-9 m^4

Kt= 3.312e-9 x 25.9e9 / 0.044 = 1950 Nm/rad

Kt= 1950 x n / 180 = 34 Nm/deg

6. TORQUE TRANSFER TO THE LEFT SIDE OF HUB

Kt = Ktl + Kts	Torque stiffness of complete assembly
Kth = 34 Nm/deg	Torque stiffness of hub shaft
Kts = 195.4 Nm/deg	Torque stiffness of spokes (one side)
Ktl	Torque stiffness of hub and left side

$$\frac{1}{Ktl} = \frac{1}{Kth} + \frac{1}{Kts}$$

$$\frac{1}{Ktl} \quad \frac{1}{34} \quad \frac{1}{195.4} \quad \frac{1}{29}$$

Ktl = 29 Nm/deg

Kt = *195.4 + 29 = 224* Nm/deg

100 x 29 / 224 = 13%	Percentage of torque to left side

7. RIM COMPRESSION FROM SPOKE TENSION

C = N x T / (2 x *n)*	Compression at rim joint
N =36	Number of spokes
T = 1000N	Tension in one spoke
C =36x1000/(2xir)=5730N	

8. CONSTRICTION FORCE OF INFLATED TIRE

T = C - E	Tire tension from inflation
• = 0.8 MPa	Tire pressure
d = 25 mm = 0.025 m	Diameter of tire cross section
r = d/2	Radius of tire cross section
a = 45°	Cord angle of casing (45 typical)
$A = n x^{r2}$	Area of tire cross section
$C = P x A x 2 x \tan^2(a)$	Constricting component
• $= P x A$	Expanding component

A = 7r x 0.0125 = 4.909e-4 m^2

C= 0.8e6 x 4.909e-4 x 2 x 1= 785.4 N

• = 0.8e6 x 4.909e-4 = 392.7 N

T = 785.4 - 392.7 = 392.7 N

For T = 0 the cord angle must be 35.27 degrees and is used for most hoses.

BIBLIOGRAPHY

Roark, Raymond J. *Formulas for Stress and Strain.* McGraw-Hill Book Company.

Wiedemer, K. "Kraftverteilung am Speichenrad", Konstruktion, Vol. 2, pp 64-66, 1962.

FINITE ELEMENT COMPUTER ANALYSIS

The wheel deflection plots in Figures 7, 8, 9, 11 and 12 were computed by the finite element method (FEM). This technique is widely used for structural analysis of aircraft, bridges, ships, automobiles, watch springs, and ball bearings. Because the bicycle wheel has identical, repetitive, symmetrically arranged elements, it allows the use of a simplified method specifically designed for circular structures. For this analysis, the wheel was modeled as a two-dimensional structure. Although the wheel has three dimensions, nearly all its dynamics are two dimensional and can be accurately modeled in one plane.

The term finite is used in contrast to the essentially infinite complexity of a large structure that can deform simultaneously in varying amounts at different places. The FEM divides a structure into small, simple, structural sections whose individual deflections can be solved easily. Thus the rim of a 36-spoke wheel is divided into 36 short structural beams that reach from spoke to spoke. Each endpoint is called a node.

Each spoke is an element, as is each rim segment, giving a 36-spoke wheel a total of 72 elements and 3 7 nodes. Each of these elements is easily defined in structural terms. The rim elements have a resistance to bending, tension and compression, while the spokes resist only tension. Equations are written for each of these conditions based on the material properties and the shape and size of the element. The equations are solved simultaneously to determine the displacement of each node when a specified load is applied at a specific node. The central node at the hub is fixed and, therefore, is not computed.

The 36 active nodes at the rim and spoke junctions are given three degrees of freedom. They can move tangentially, radially, and rotationally in the plane of the wheel. These displacements are computed for each node. This model can be used for both radial and tangential spoking to give results whose accuracy is only limited by the precision of rim cross section and spoke dimension measurements.

For analyzing tangential spoking, required for torque loads, each spoke receives a separate node at an offset from the hub center. The spokes enter the rim at an angle determined by the spoke pattern and hub size. Since both the hub nodes of a tangential wheel and the central node of a radial wheel are fixed in space, they are eliminated from the computation. Angled spokes, however, impart tangential forces to the rim. The torque is introduced by a tangential force at the ground contact point that rotationally displaces the rim with respect to the fixed, central hub.

By using a modified Potter's method to solve simultaneous matrix equations, the element submatrices are recursively solved until all coefficients for the equation of the wheel have been found. The deflections of each node are related to deflections of each higher-numbered node. The deflections of the first node are also related to the deflections of the next higher node at each recursive step. This process provides all the data required to solve the deflection equations for the last node. The value for the last node is then substituted back into the recursive equations until all nodal deflections are found. This method requires about one tenth the computer storage that conventional equation solvers require besides being faster. These considerations were important with respect to the computers available when this work was done.

The computed results and the input values from which the deformed wheel graphs were plotted are shown in tables 1 through 5.

N Spokes		36.00
Radius	(mm)	300.00
E_{ST} Spoke	(GPa)	- 193.00
A Spoke	(mm2)	2.00
E_{AR} Rim	(GPa)	69.00
A Rim	(mm2)	77.00
I Rim	(mm4)	1124.00
Load	(N)	500.00
Location	(@spoke)	19.00
Spoke Angle	(deg)	5.00

Spoke	**Radial mm**	**Tangential mm**	**Rotational Radians**
1	.0069444	-.0206513	-.0000528
2	.0062654	-.0223400	-.0000794
3	.0065904	-.0239973	-.0001001
4	.0074596	-.0257494	-.0000818
5	.0071764	-.0275593	-.0000707
6	.0062864	-.0292832	-.0001045
7	.0067168	-.0309675	-.0001291
8	.0078336	-.0327785	-.0001039
9	.0074715	-.0346630	-.0000888
10	.0063110	-.0364320	-.0001284
11	.0066926	-.0381343	-.0001550
12	.0079012	-.0399681	-.0001260
13	.0078908	-.0419141	-.0001288
14	.0087002	-.0439475	-.0002213
15	.0132743	-.0464587	-.0002637
16	.0141669	-.0494407	.0000079
17	-.0115478	-.0502988	.0007718
18	-.0844696	-.0425248	.0016053
19	-.1531575	-.0219948	-.0000421
20	- .0862531	-.0014889	-.0017748
21	-.0139589	.0066727	-.0009014
22	.0120199	.0062881	-.0001489
23	.0129319	.0035698	.0000837
24	.0088847	.0011671	.0000694
25	.0066331	-.0006882	.0000212
26	.0061078	-.0023162	-.0000078
27	.0063133	-.0039151	-.0000209
28	.0066494	-.0055489	-.0000202
29	.0066294	-.0072136	-.0000182
30	.0063642	-.0088680	-.0000308
31	.0064936	-.0105086	-.0000442
32	.0068966	-.0121837	-.0000392
33	.0067581	-.0138866	-.0000352
34	.0062869	-.0155514	-.0000549
35	.0065158	-.0171937	-.0000719
36	.0071524	-.0189010	-.0000603

Table 1. Radial load (see fig. 7)

N Spokes	=	36.00
Radius	(mm)	300.00
E_{ST} Spoke	(GPa)	193.00
A Spoke	(mm2)	2.00
E_{AL} Rim	(GPa)	69.00
A Rim	(mm2)	77.00
I Rim	(mm4)	1124.00
Brake F	(N)	500.00
Location	(@spoke)	1.00
Spoke Angle	(deg)	5.00

Spoke	**Radial mm**	**Tangential mm**	**Rotational Radians**
1	.0098006	-1.0650647	-.0023095
2	-.0449960	-1.0593797	-.0034538
3	-.0418721	-1.0493209	-.0042344
4	-.0074662	-1.0428415	-.0033165
5	-.0158621	-1.0387350	-.0027382
6	-.0467598	-1.0312000	-.0036925
7	-.0334627	-1.0222941	-.0042112
8	.0012791	-1.0178577	-.0032149
9	-.0083772	-1.0157119	-.0026526
10	-.0393307	-1.0100369	-.0036172
11	-.0260791	-1.0029765	-.0041366
12	.0080895	-1.0003126	-.0031523
13	-.0020555	-.9998490	-.0025925
14	-.0339008	-.9957490	-.0035353
15	-.0223025	-.9900329	-.0040701
16	.0142790	-.9887610	-.0032753
17	.0225737	-.9914943	-.0031543
18	.0304156	-.9957298	-.0043520
19	.0220088	-1.0002859	-.0027908
20	.0118245	-1.0031860	-.0034196
21	.0175049	-1.0058433	-.0029006
22	-.0090018	-1.0067843	-.0032240
23	-.0098914	-1.0054043	-.0040196
24	.0234907	-1.0070764	-.0033875
25	.0216938	-1.0116228	-.0027097
26	-.0090483	-1.0134150	-.0034956
27	-.0008150	-1.0133601	-.0041335
28	.0337585	-1.0172426	-.0033027
29	.0273492	-1.0237029	-.0026990
30	-.0041842	-1.0269476	-.0036065
31	.0067597	-1.0285244	-.0042223
32	.0422585	-1.0343439	-.0033241
33	.0347761	-1.0427334	-.0027528
34	.0036529	-1.0478661	-.0037242
35	.0148434	-1.0513976	-.0042458
36	.0411595	-1.0583832	-.0030517

Table 2. ***Brake load (see*** *fig. 8)*

N Spokes		36.00
Radius	(mm)	300.00
E_{ST} Spoke	(GPa)	193.00
A Spoke	(mm2)	2.00
$E_{,,}$ Rim	(GPa)	69.00
A Rim	(mm2)	77.00
I Rim	(mm4)	1124.00
Load	(N)	500.00
Location	(@spoke)	19.00
Spoke Angle	(deg)	5.00
Brake F	(N)	500.00
Location	(@spoke)	1.00

Spoke	**Radial mm**	**Tangential mm**	**Rotational Radians**
1	.0167450	-1.0857160	-.0023623
2	-.0387306	-1.0817197	-.0035332
3	-.0352817	-1.0733183	-.0043345
4	-.0000066	-1.0685909	-.0033983
5	-.0086856	-1.0662942	-.0028089
6	-.0404734	-1.0604832	-.0037970
7	-.0267460	-1.0532616	-.0043403
8	.0091128	-1.0506362	-.0033188
9	-.0009057	-1.0503749	-.0027414
10	-.0330197	-1.0464689	-.0037456
11	.0193865	-1.0411108	-.0042916
12	.0159908	-1.0402807	-.0032783
13	.0058354	-1.0417631	-.0027212
14	.0252005	-1.0396965	-.0037566
15	.0090282	-1.0364915	-.0043339
16	.0284459	-1.0382017	-.0032674
17	.0110259	-1.0417930	-.0023825
18	.0540540	-1.0382545	-.0027468
19	.1311487	-1.0222807	-.0028330
20	-.0744286	-1.0046749	-.0051945
21	.0035460	-.9991706	-.0038020
22	.0030181	-1.0004962	-.0033729
23	.0030404	-1.0018345	-.0039360
24	.0323753	-1.0059093	-.0033181
25	.0283269	-1.0123110	-.0026885
26	.0029405	-1.0157312	-.0035035
27	.0054983	-1.0172752	-.0041544
28	.0404079	-1.0227914	-.0033229
29	.0339786	-1.0309165	-.0027172
30	.0021800	-1.0358156	-.0036373
31	.0132533	-1.0390330	-.0042665
32	.0491552	-1.0465276	-.0033633
33	.0415342	-1.0566200	-.0027880
34	.0099399	-1.0634175	-.0037791
35	.0213593	-1.0685914	-.0043177
36	.0483119	-1.0772842	-.0031120

Table 3. ***Radial and braking load (see fig. 9)***

N Spokes		36.00
Radius	(mm)	300.00
E_{ST} Spoke	(GPa)	193.00
A Spoke	(mm2)	2.00
E_{AL} Rim	(GPa)	69.00
A Rim	(mm2)	77.00
I Rim	(mm4)	1124.00
Spoke Angle	(deg)	5.00
Torque	(Nm)	500.00

Spoke	**Radial mm**	**Tangential mm**	**Rotational Radians**
1	.0087626	-.9956295	-.0026055
2	-.0217474	-.9943391	-.0035408
3	-.0093931	-.9916075	-.0040843
4	.0245102	-.9931316	-.0031475
5	.0153255	-.9969249	-.0026027
6	-.0152500	-.9973146	-.0035623
7	-.0023768	-.9963018	-.0041090
8	.0317215	-.9995930	-.0031591
9	.0220855	-1.0051357	-.0026200
10	-.0087299	-1.0072289	-.0036064
11	.0046899	-1.0079458	-.0041622
12	.0391995	-1.0130377	-.0031920
13	.0286738	-1.0203454	-.0026399
14	-.0038828	-1.0239887	-.0036420
15	.0089644	-1.0260496	-.0042443
16	.0482376	-1.0328391	-.0034381
17	.0558132	-1.0438321	-.0032395
18	.0544489	-1.0555421	-.0042961
19	.0233154	-1.0647839	-.0024932
20	-.0097507	-1.0634757	-.0033050
21	-.0134871	-1.0591241	-.0029758
22	-.0424457	-1.0519712	-.0033822
23	-.0425049	-1.0423618	-.0041825
24	-.0073844	-1.0361056	-.0034926
25	-.0088419	-1.0329001	-.0027732
26	-.0400241	-1.0268668	-.0035421
27	-.0319285	-1.0189492	-.0041500
28	.0025831	-1.0150193	-.0032945
29	-.0036049	-1.0136674	-.0026789
30	-.0345663	-1.0091018	-.0035457
31	-.0239987	-1.0028979	-.0041106
32	.0101846	-1.0008506	-.0032074
33	.0024173	-1.0012148	-.0026294
34	-.0282344	-.9982658	-.0035376
35	-.0165582	-.9938044	-.0040857
36	.0173786	-.9935578	-.0031621

Table 4. ***Torque load (see*** *fig. 12)*

N Spokes		36.00
Radius	(mm)	300.00
E_{ST} Spoke	(GPa)	193.00
A Spoke	(mm2)	2.00
E_{AR} Rim	(GPa)	69.00
A Rim	(mm2)	77.00
I Rim	(mm4)	1124.00
Load	(N)	500.00
Location	(@spoke)	19.00
Spoke Angle	(deg)	5.00
Torque	(Nm)	500.00

Spoke	**Radial mm**	**Tangential mm**	**Rotational Radians**
1	.0157070	-1.0162808	-.0026583
2	-.0154820	-1.0166790	-.0036201
3	-.0028027	-1.0156049	-.0041844
4	.0319698	-1.0188810	-.0032292
5	.0225019	-1.0244842	-.0026734
6	-.0089636	-1.0265978	-.0036668
7	.0043400	-1.0272694	-.0042381
8	.0395552	-1.0323715	-.0032630
9	.0295571	-1.0397986	-.0027088
10	-.0024189	-1.0436609	-.0037348
11	.0113826	-1.0460801	-.0043172
12	.0471007	-1.0530058	-.0033180
13	.0365646	-1.0622595	-.0027687
14	.0048174	-1.0679362	-.0038633
15	.0222387	-1.0725083	-.0045080
16	.0624045	-1.0822798	-.0034302
17	.0442654	-1.0941308	-.0024678
18	-.0300207	-1.0980669	-.0026908
19	-.1298422	-1.0867787	-.0025354
20	-.0960038	-1.0649646	-.0050798
21	-.0274461	-1.0524514	-.0038772
22	-.0304258	-1.0456831	-.0035311
23	-.0295730	-1.0387920	-.0040989
24	.0015003	-1.0349386	-.0034231
25	-.0022088	-1.0335883	-.0027520
26	-.0339163	-1.0291830	-.0035499
27	-.0256152	-1.0228642	-.0041709
28	.0092324	-1.0205682	-.0033146
29	.0030245	-1.0208810	-.0026971
30	-.0282021	-1.0179698	-.0035765
31	-.0175051	-1.0134066	-.0041548
32	.0170812	-1.0130343	-.0032465
33	.0091754	-1.0151014	-.0026646
34	-.0219475	-1.0138171	-.0035925
35	-.0100424	-1.0109982	-.0041577
36	.0245310	-1.0124588	-.0032225

***Table 5. Radial and torque load (see** fig. 11)*

GLOSSARY

Words are defined as they are used in this book which differs from the principal dictionary definition at times.

alloy	mixture of a pure metal such as iron and a small amount of another metal or metals; stainless steel
aluminum	aluminum alloy (in all references)
atm	standard atmospheric pressure 101.3 kPa
ATB	all terrain bicycle; mountain bike
buckling	bowing of a column in compression, such as a pole vaulter's pole
butted spoke	swaged spoke
bracing angle	angle the spoke makes with the plane of the wheel
cassette hub	rear wheel hub with integral freewheel; freehub
compression	pushing force; a chair leg is in compression

compression	pushing force; a chair leg is in compression
conventional tire	a tire with a separate tube and casing; clincher; wired-on
clincher	a tire with a casing whose bead is designed to clinch by inflation pressure in a rim with hooked sidewalls
deflection	change in shape resulting from a force; strain
deformation	temporary or permanent deflection
derailleur	mechanism that shifts a bicycle chain from one sprocket to another
dished wheel	wheel whose rim is not centered between its hub flanges; rear wheel; asymmetric wheel
ductile	deforms plastically without breaking; taffy for instance
dynamic	changing, variable, moving
elastic	deforms with complete rebound
elastic limit	boundary between elastic and plastic deformation
elasticity	deformation per unit of force (m/N)
fatigue	structural weakness resulting from repeated deformation
flange	disk-shaped portion of a hub for anchoring spokes
flange diameter	diameter on which spoke holes lie in the flange
force	push, pull, twist
freehub	cassette hub; integral hub and freewheel
freewheel	a mechanism with one or more sprockets that rotates freely in one direction only
fretting	repetitive microscopic rubbing between two objects
galling	welding between two metals by unlubricated sliding; cold welding
gauge (spoke)	English measure of wire diameters; 14 ga = 2.0 mm, 15 ga = 1.8 mm, 16 ga = 1.6 mm
gear cluster	several sprockets mounted on a freewheel
high-wheeled bicycle	19th century bicycle with a large front wheel
hub	central element of a wheel that rotates on an axle and in which spokes are anchored

hub diameter	flange diameter
hub shaft	portion of hub that connects its flanges
inbound spoke	spoke that projects into the hub on insertion
interlacing	placing outbound spokes under inbound spokes at their outer crossing
kilogram (kg)	SI unit of mass; kg = 2.2 pounds
lateral	from side-to-side
load-affected zone	portion of rim that deforms under load
metal	structural material; iron, steel, aluminum, brass, titanium, etc.
meter (m)	SI unit of length; m = 39.37 inches
millimeter (mm)	unit of length; 1/1000 m = 1/25.4 inch
mode (vibration)	in the first mode the whole spoke swings like a jump rope, in the second mode one half is up while the other is down.
MTB	mountain bike; ATB; VTT (Fr)
Newton (N)	SI unit of force required to accelerate a mass of 1 kg one meter per second per second
nipple	tubular threaded nut used to tension spokes
outbound spoke	spoke that projects out of the hub on insertion
Pascal (Pa)	SI unit of pressure, Pa = N/mz usually used in gigaPascal (GPa), megaPascal (mPa) or kiloPascal (kPa); GPa = 1,000,000,000 Pa; mPa = 1,000,000 Pa; kPa = 1,000 Pa; 101.3 kPa = 14.69 psi = 1 atm; 1 psi = 6.9 kPa
plastic	deforms without rebound; butter, for instance
presta valve	common on high performance bicycle tires; uses a locknut instead of return spring;
pulling spoke	spoke that becomes longer when the wheel is driven
pushing spoke	spoke that becomes shorter when the wheel is driven
radial	extending from a common center
rim	peripheral part of a wheel on which the tire is mounted and to which spokes are attached
rim compression	rim force from spoke tension and tire inflation
sew-up tire	tire casing that is sewn to enclose its tube; tubular tire

schrader valve	valve commonly used on automobile tires
SI	Systeme Internationale (metric units)
spoke	wire that connects hub to rim
sprocket	toothed wheel to engage a chain
static	fixed, unchanging, constant
stiffness	force per unit deformation, (N/m)
straight gauge spoke	uniform wire diameter; unswaged
strain	unit elongation, (m/m)
stress	force per unit cross section area (N/m^2, Pa)
swage	forming, as in metal; stretch; taper
swaged spoke	spoke whose mid section has been swaged to a smaller diameter; butted spoke
tangent	a line grazing the circumference of a circle
tangential	in a tangent manner
tension	pulling force; a guitar string is in tension
tensiometer	gauge for measuring tension in a wire
torque	twisting force; a screwdriver transmits torque
torsion	condition resulting from a torque
true wheel	wheel whose periphery appears motionless while rotating on its axle
truing	adjusting spoke tension to make a true wheel
tubular tire	tube-shaped tire containing an integral inner tube; sew-up
unit load	N/mz, for instance, Newtons per square meter
wind drag	force resulting from a body moving through air
windup	rotation of the hub of a wheel with respect to the rim
yield point	elastic limit, beginning of plastic deformation

Bicycle Wheel.. .

... is a book for every cyclist, from novice rider to experienced wheel builder. It goes beyond the most commonly asked questions:

- **Should I use large-flange hubs for touring?**
- **Should I lace crossed-four or crossed-three?**
- **Are radially spoked wheels more aerodynamic than crossed-four?**
- **How can I build a 32-spoke crossed-two wheel?**
- **Are swaged spokes more durable than straight gauge spokes?**
- **Does hard anodizing improve rim durability?**
- **Does lower spoke tension give a softer ride?**

Bicycle Wheel.. .

... answers these questions by explaining structural theory and practical methods used to build strong wheels.

...shows how to become a proficient wheel builder using a step-by-step system that works for any lacing pattern.

...reveals the "secrets" of lasting trueness and prevention of spoke breakage.

AVOCET $24.99
52499
9 '780960"723669"
ISBN 0-9607236-6-8

Bicycle Wheel

3rd Editio

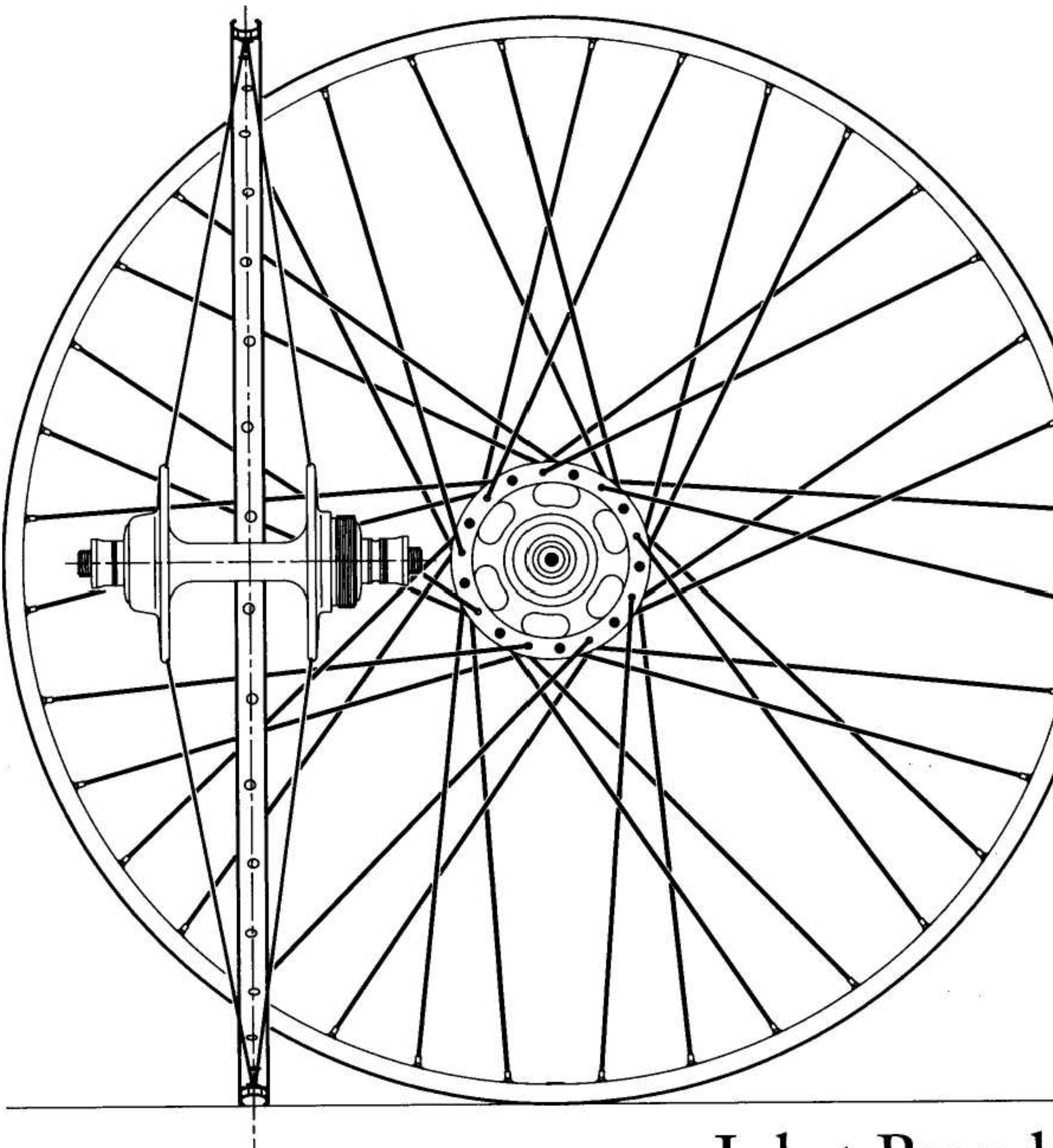

Jobst Brand